Commissioners:
Kevin Whipple
Patrick Gallagher
Sharon Blandford
Andrew Bramlett
Rachel Butler
Zach Buffington

Historic Preservation Commission
Meeting Agenda
November 15, 2024 8:00 AM
Council Chambers
(2529 J.O. Stephenson Avenue, Kennesaw, GA 30144)

This meeting may be accessed in-person or by using the following link: https://www.kennesaw-ga.gov/publicmeetings/.

HPC Application Acronyms:
Certificate of Appropriateness (COA), Certificate of Appropriateness Administrative (COAA), Central Business District (CBD) project and Public Arts Exhibit (PA)

1. **Call to Order / Roll Call**
2. **Approval of the Meeting Minutes**
   A. **Approval of Meeting Minutes: August 16, 2024**
3. **Financial Report**
4. **Old Business**
5. **New Business**
   A. **COA2024-09 3011 North Main Street (20012800190)**
   Consideration of approval of a Certificate of Appropriateness application submitted by Kris Vanhemert to enclose the existing floor plan with exterior walls, create a 5ft recess under the roof line to be used as a sitting area, and install new windows and a double door set at 3011 N. Main Street.

   B. **COA2024-10 2986 North Main St (20013900080)**
   Consideration of approval of a Certificate of Appropriateness application submitted by David Brown for a new addition to the existing house located at 2986 N. Main Street.
6. **COAA Approval by City Staff and HPC Chair**
   A. **COAA2024-15 - 1924 Galt Commons**

B. **COAA2024-16 - 2078 Cherokee Ridge Trail**

C. **COAA2024-17 - 2975 N. Main Street**

D. **COAA2024-18 - 2065 Cherokee Ridge Trail**

E. **COAA2024-19 - 2990 N. Main Street**

7. **Discussion**

8. **Public Comments**

9. **Staff Comment**

10. **Adjourn**

The next scheduled meeting of the Historic Preservation Commission will be Friday, December 20th, 2024 at 8:00 a.m.

NOTICE: Any person who desires to appeal any decision from this meeting will need a record of the proceedings, and for the purpose may need to ensure that a verbatim record of the proceedings is made which includes the testimony and evidence upon which the appeal is based. The Agenda is designed to make more efficient use of the HPC's time. It is not designed to curtail discussion or input. If you need special accommodation to attend or participate in our meetings, please contact City Hall at least 24 hours in advance of the specific meeting you are planning to attend.

MINUTES OF HISTORIC PRESERVATION COMMISSION MEETING
CITY OF KENNESAW
Council Chambers
(2529 J.O. Stephenson Avenue, Kennesaw, GA 30144)
August 16, 2024
8:00 AM

---

1. Call to Order / Roll Call

Chairman Whipple called the meeting to order at 7:59 am.
Roll Call: Rachel Butler, Andrew Bramlett, Patrick Gallagher, Sharon Blandford and Zack Buffington
Absent: N/A
Staff Present: Darryl Simmons (Planning & Zoning Administrator), Chanelle Campbell (Assistant Zoning Administrator & City Planner), and Natalie Faustine (Community Development Administrative Assistant)
Speakers Present: William Benson (Property Owner)

2. Approval of the Meeting Minutes

A. Approval of Meeting Minutes: July 19, 2024

Chairman Whipple called for a motion to approve the meeting minutes as presented.
Motion to approve by Commissioner Blandford
Seconded by Commissioner Bramlett
Chairman Whipple proceeded with a roll call for approval.
Vote taken, motion unanimously approved 5-0. Motion carried.

3. Financial Report

Mr. Simmons stated that there have been no new expenditures over the past 30 days, maintaining a balance of $23,378. The Planning and Zoning Department's budget for the HPC remains unchanged, encompassing funds for training and any programs or initiatives the Commissioners wish to pursue.

Chairman Whipple called for a motion to approve the financial report as presented.
Motion to approve by Commissioner Gallagher
Seconded by Commissioner Blandford
Chairman Whipple proceeded with a roll call for approval.
Vote taken, motion unanimously approved 5-0. Motion carried.

4. Old Business

A. **Landscaping Plan:** 3000 N Main St
Review of the landscaping plan for the pool installation, as mandated by the Certificate of Appropriateness approval conditions for COA2023-17, submitted by property owner William Benson.

DRAFT

Mr. Simmons stated that the approval conditions for the Certificate of Appropriateness required the review and approval of the landscaping plan for the pool installation at 3000 N Main Street. The applicant was present to present the landscaping plan and answer any questions. Mr. William Benson provided an overview of the landscaping plan, noting that grass will be around the pool, a few bushes along Knightsbridge Road to cover the pool equipment, and a wrap-around gravel driveway on the right side of the house. Chairman Whipple inquired about the installation of any trees, to which Mr. Benson responded that none were planned. Commissioner Gallagher asked about existing fencing, and Mr. Benson confirmed the presence of existing wrought iron fencing with no proposed changes. Commissioner Butler inquired about the shrubs' size and ability to cover the pool and equipment. Mr. Benson explained that the pool is not visible from the road, and the shrubs are intended to cover the equipment, potentially growing up to 4 feet tall, with regular trimming to maintain their size.

Chairman Whipple called for a motion to approve the landscaping plan as presented.
Motion to approve by Commissioner Gallagher
Seconded by Commissioner Blandford
Chairman Whipple proceeded with a roll call for approval.
Vote taken, motion unanimously approved 5-0. Motion carried.

5. New Business

6. COAA Approval by City Staff and HPC Chair

7. Discussion

8. Public Comments

9. Staff Comment

A. Update for public outreach regarding the proposed HPC ordinance and design standards updates.

Ms. Chanelle Campbell expressed her gratitude to the Commissioners for their feedback on the questionnaire, noting that there have been 66 responses so far. She also reminded the Commissioners of the Special Called meeting on September 17th at 6:30 pm to review the survey responses and engage with the public before finalizing the historic design standards update.

10. Adjourn

Chairman Whipple adjourned the meeting at 8:09 am.

DRAFT

1. **NAME OF APPLICANT:** KRIS VANHEMERT
   - [x] Owner
   - [ ] Other
   - [ ] Other, please specify _____

APPLICANT MAILING ADDRESS: 3011 North Main Street

Kennesaw GA. 30144

(Home#) [redacted] (Cell#) [redacted] (Email) [redacted]

PROPERTY ADDRESS: 3011 North Main Street

Land Lot 128 and 139 Tax Parcel 20012800190 Lot Size .969

Current zoning on property: ~~R4~~ R-15, Single Family Residential

2. **NAME OF ATTORNEY OR REPRESENTATIVE:**

_____

(Home#)_____ (Cell#) _____ (Email) _____

NAME OF OWNER:

_____

(Home#)_____ (Cell#) _____ (Email) _____

3. **ACTIVITY**

- [ ] New Construction
- [ ] Demolition
- [ ] Awnings
- [ ] Fence
- [x] Repairs or Alterations
- [ ] Landscaping
- [x] Exterior Architectural Features
- [ ] Exterior Environmental Feature Change
- [ ] Moving a Building
- [ ] Sign Erection
- [ ] Sign Placement *

*** (NOTE – Business License required before signage installation)**

Please describe your proposed work as simply and accurately as possible. Use the attached submittal criteria checklist to guide you in your description. Be sure to indicate materials to be used. Accurate drawings and photographs are required. (Use extra sheet, if necessary.) **Signed and sealed drawings from an architect, engineer or other design professional are required when construction of a new building, alterations and/or additions to existing structures are being made (Code 800.14.1).**

Section B and Section E on included exisitng floor plan are to be enclosed with traditional exterior walls of 2x6 Section B 393 sq. ft. and section E 132 sq. ft. are to become a bedroom and interior hallway. The roof over this Area is not going to be altered at all and the existing support columns plus the existing engineered lumber remains as it is. There will be a 5 ft. recess under the roof line facing Main St. to be used as a sitting area. The exterior walls shall be sided with Hardy Plank siding w/ a 4" reveal. There will be a custom double door set plus 2 Pella Reserve Traditional vinyl clad windows (or equivalent) plus an additional Pella Slider (or equivalent) Facing Main St. there will be 1 Window and 1 Double Door set painted as shown.

Important: This form must be completed before the Historic Preservation Commission will consider the approval of any material change to a property within a Historic District. This form, along with supporting documents must be filed with 1 Original (4) copies including color photos (excluding models, material and color samples, where one (1) is sufficient). The application and supporting documents are to be placed on a **CD in a PDF format**.

Incomplete applications will not be docketed for consideration by the Historic Preservation Commission.

The City of Kennesaw will not issue any permits until 7 days after the Commission's decision, per City Ordinance No. 2003-51, Section Two. 800.20 –Any person or persons jointly or severally aggrieved by any decision of the Kennesaw HPC may appeal to the Mayor and City Council. The appeal must be filed within 7 days of the decision of the Commission and must be made by written petition delivered to the zoning administrator. The appeal shall be on the application exactly as presented to the commission.

10/9/24

Signature of Applicant **Date**

10/9/24

Signature of Owner **Date**

(If different from applicant, consenting to work to be performed on said property.

Original floor plan showing location and size of proposed remodel. The roof and ceiling along with the floor will not be altered.

	Room Type	Area
	A Main Area	2138
	B SCREEN PORCH	393
	C STOOP	238
	D OPEN PORCH	168
	E OPEN PORCH	132
	F MASONRY UTILITY	132
	G CONCRETE PATIO	120

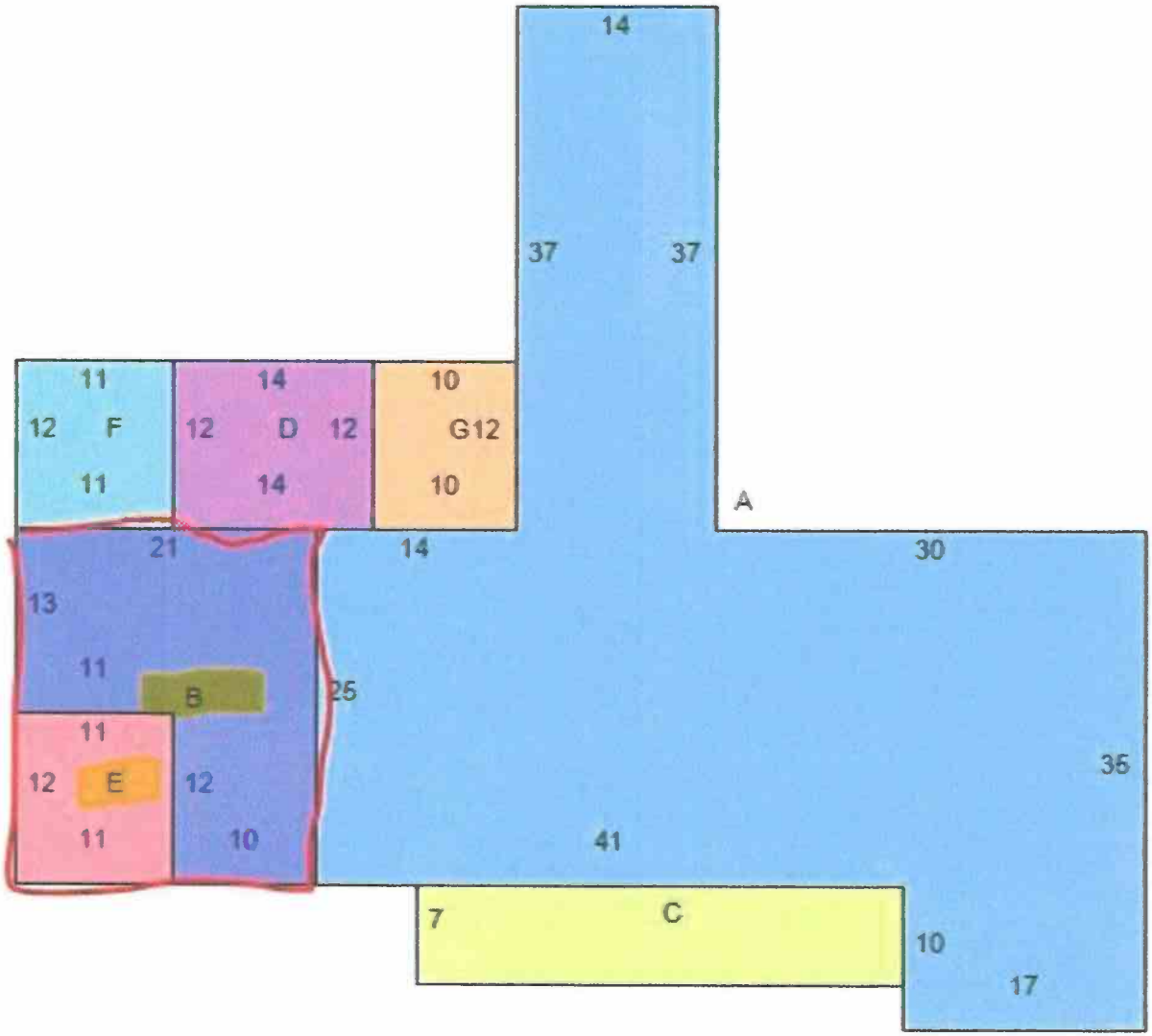

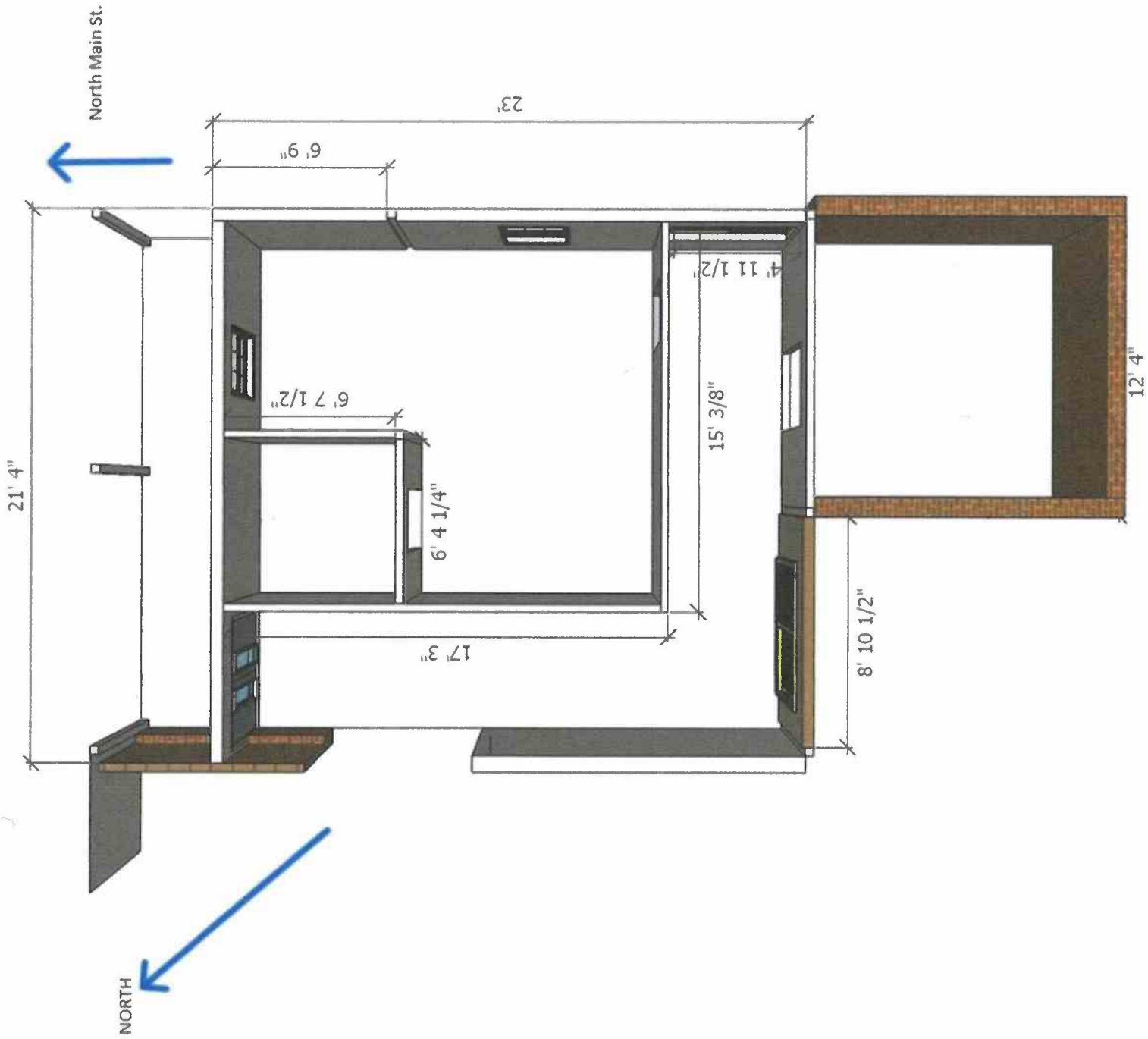
North Main St.
NORTH
21' 4"
6' 9"
23'
6' 7 1/2"
6' 4 1/4"
17' 3"
15' 3/8"
4' 11 1/2"
8' 10 1/2"
12' 4"

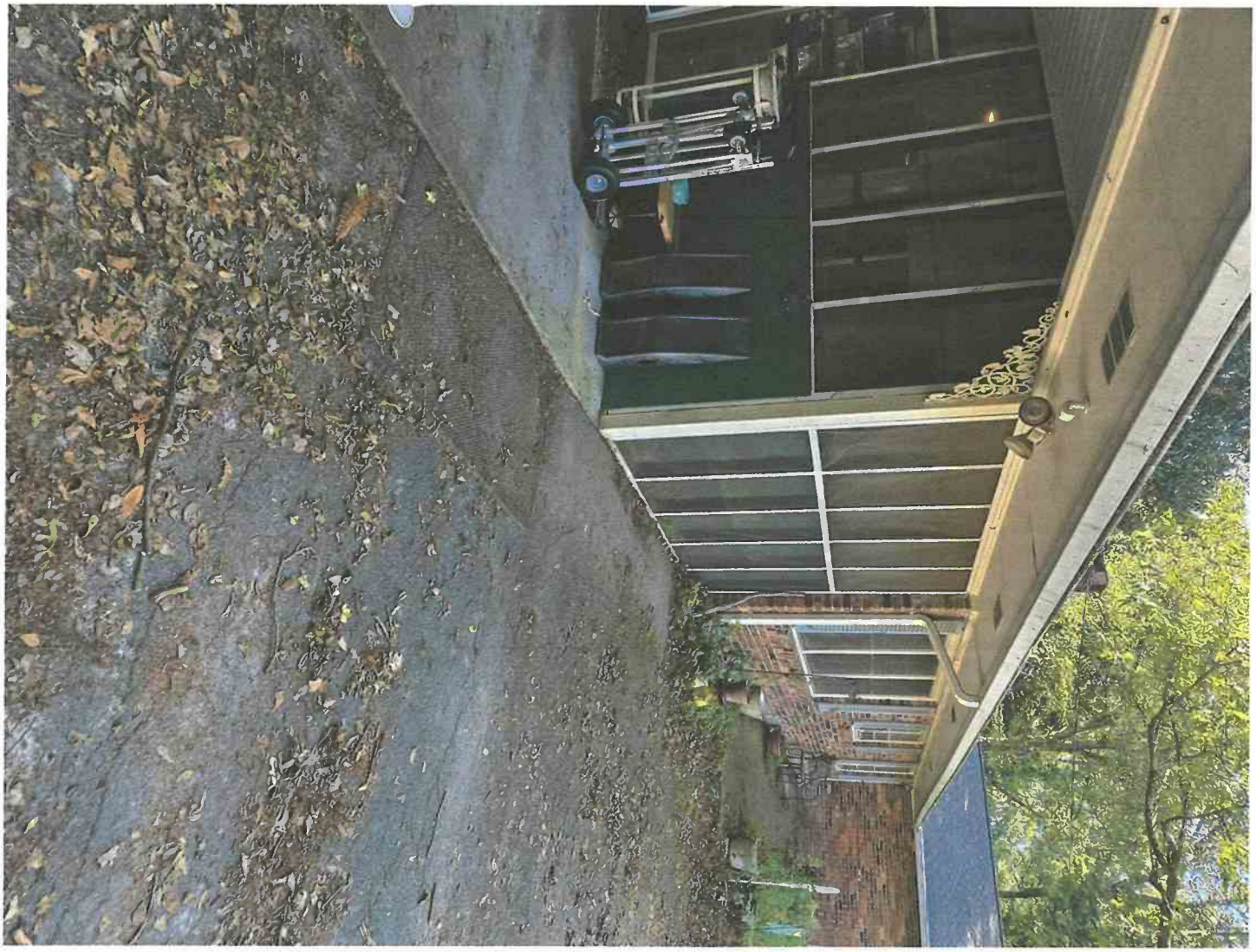

Integral light technology® Grilles

Prairie Lite Patterns

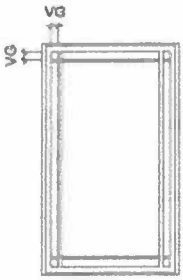

9-Lite
(Fixed Units)

9-Lite

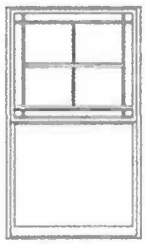

12-Lite

Standard corner lite dimension for Prairie pat
= 2-1/2" VG.

Available in transoms ≥ 1'3" height and width

Available in all standard and special sizes.

Other Available Patterns

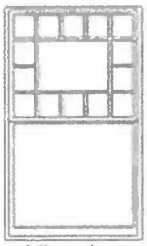

Victorian

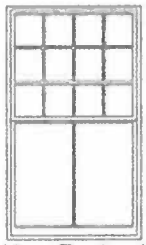

New England

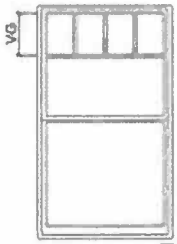

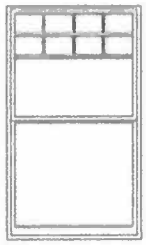

Top Row

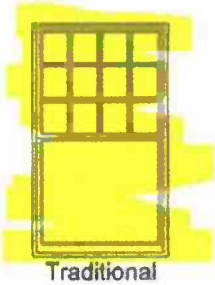

Traditional

VG = Visible Glass

Lite dimensions noted can vary.

For size and pattern availability contact your Pella sales representative.

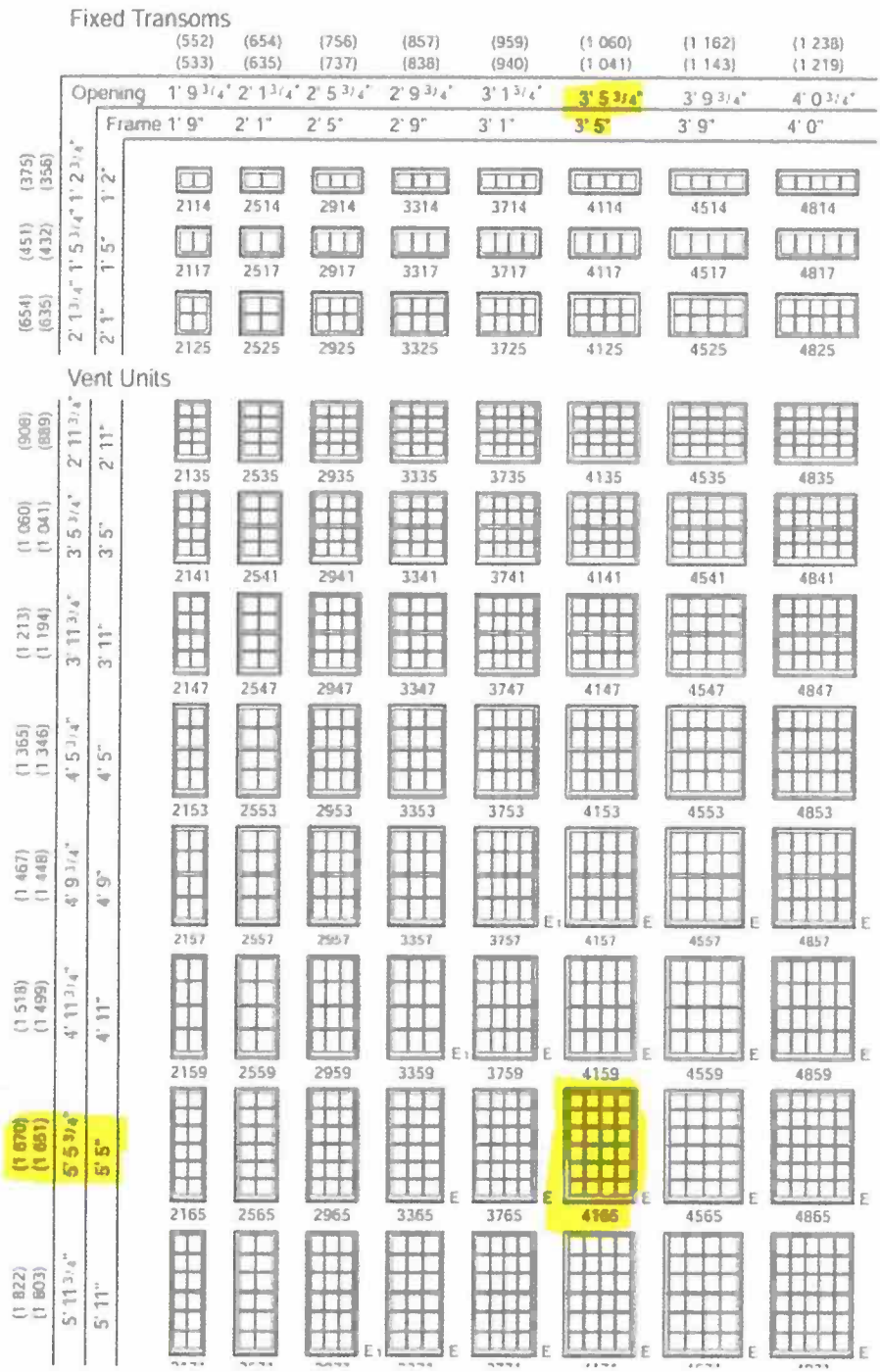
Fixed Transoms
(552) (654) (756) (857) (959) (1 060) (1 162) (1 238)
(533) (635) (737) (838) (940) (1 041) (1 143) (1 219)
Opening 1' 9 3/4" 2' 1 3/4" 2' 5 3/4" 2' 9 3/4" 3' 1 3/4" 3' 5 3/4" 3' 9 3/4" 4' 0 3/4"
Frame 1' 9" 2' 1" 2' 5" 2' 9" 3' 1" 3' 5" 3' 9" 4' 0"
(375) (356) 1' 2 3/4" 1' 2"
2114 2514 2914 3314 3714 4114 4514 4814
(451) (432) 1' 5 3/4" 1' 5"
2117 2517 2917 3317 3717 4117 4517 4817
(654) (635) 2' 1 3/4" 2' 1"
2125 2525 2925 3325 3725 4125 4525 4825
Vent Units
(908) (889) 2' 11 3/4" 2' 11"
2135 2535 2935 3335 3735 4135 4535 4835
(1 060) (1 041) 3' 5 3/4" 3' 5"
2141 2541 2941 3341 3741 4141 4541 4841
(1 213) (1 194) 3' 11 3/4" 3' 11"
2147 2547 2947 3347 3747 4147 4547 4847
(1 365) (1 346) 4' 5 3/4" 4' 5"
2153 2553 2953 3353 3753 4153 4553 4853
(1 467) (1 448) 4' 9 3/4" 4' 9"
2157 2557 2957 3357 3757 4157 4557 4857
(1 518) (1 499) 4' 11 3/4" 4' 11"
2159 2559 2959 3359 3759 4159 4559 4859
(1 670) (1 651) 5' 5 3/4" 5' 5"
2165 2565 2965 3365 3765 4165 4565 4865
(1 822) (1 803) 5' 11 3/4" 5' 11"

Item Report

TO: The Historic Preservation Commission

FROM: Darryl Simmons, Zoning Administrator

DATE: November 15, 2024

TITLE: **COA2024-10 2986 North Main St (20013900080)**
Consideration of approval of a Certificate of Appropriateness application submitted by David Brown for a new addition to the existing house located at 2986 N. Main Street.

Summary:

Recommendation:

Fiscal Impact:

Attachments:
1. COAA2024-10_2986 Main St_ApplicationPacket

CERTIFICATE OF APPROPRIATENESS APPLICATION

□ Application Fee: $50.00 □ Demolition Fee: $150.00

All new construction and exterior remodeling of buildings within the Kennesaw Historic District shall be subject to the architectural review and approval of the Historic Preservation Commission (**HPC**). HPC approval is also required for Kennesaw Downtown Development Authority (KDDA) Façade and Signage Grants.

Darryl Simmons, Planning and Zoning Administrator for the City of Kennesaw will meet with you to direct your application process. To make an appointment, please call 770-590-8268.

A Certificate of Appropriateness (COA) shall be obtained from the **HPC** prior to the issuance of a building permit. The **HPC** shall consider a variety of issues in rendering its decision including, but not limited to the following:

a. The surrounding development
b. The best interest of the community
c. Previous studies undertaken by the City as well as the standards contained herein.

Application for signage to include

□ Material Specifications
□ Drawing of Sign with Dimensions and Colors to be used
□ Façade detail of fonts

Application for landscaping to include

□ Variety of trees and shrubs
□ Indicate size and location of plantings

Application for exterior renovations and additions to include

□ Existing conditions site plan depicting location of addition in relation to the existing property
□ Existing floor plan of building
□ Proposed floor plan of building including portions not to be altered
□ Elevations of all exterior façade of addition including relationship to existing building
□ Detail of trim to be utilized on façade
□ Manufacturer's specifications for windows, doors and lighting that will be installed-including a photograph or sketch
□ Photographs of all existing facades; existing structures adjacent to property; and views from the façade to be altered

CONSISTENT WITH THE UNITED STATES CONSTITUTION AND THE RELIGIOUS LAND USE AND INSTITUTIONALIZED PERSONS ACT OF 2000, THE CITY OF KENNESAW DOES NOT DISCRIMINATE ON THE BASIS OF RELIGION IN THE APPLICATION OF ITS LAWS, POLICIES, OR PROCEDURES, INCLUDING THE APPLICATION OF ITS LAND USE REGULATIONS AND ZONING LAWS.

Under the Religious Land Use and Institutionalized Persons Act of 2000 ("RLUIPA"), no government, including the City of Kennesaw, may apply its zoning or land use laws in a manner that imposes a substantial burden on the religious exercise of a person, including a religious assembly or institution. RLUIPA also provides that no government, including the City of Kennesaw, may apply a land use regulation in a manner that treats a religious assembly or institution (a church, for example) on less than equal terms than a nonreligious institution or assembly (a day care center or movie theater, for example). Finally, RLUIPA provides that no government, including the City of Kennesaw, may impose or implement a land use regulation in a manner that discriminates against a religious assembly or institution.

If you believe that the City of Kennesaw, or any other local government or municipality, has discriminated against you in the implementation of its zoning or land use laws, please contact the United States Department of Justice.

United States Department of Justice
Civil Rights Division
Housing and Civil Enforcement Section
950 Pennsylvania Ave. N.W. –G St.
Washington, DC 20530

1. **NAME OF APPLICANT:** David G Brown
   - ☐ Owner
   - ☐ Other
   - ☐ Other, please specify general contractor

   APPLICANT MAILING ADDRESS: [redacted]

   _____

   (Home#)_____ (Cell#) [redacted] _____ (Email) [redacted]

   PROPERTY ADDRESS: 2986 main st kennesaw ga

   Land Lot _____ Tax Parcel _____ Lot Size _____

   Current zoning on property: _____

2. **NAME OF ATTORNEY OR REPRESENTATIVE:**

   _____

   (Home#)_____ (Cell#) _____ (Email) _____

   NAME OF OWNER:

   Collie

   (Home#)_____ (Cell#) _____ (Email) _____

3. **ACTIVITY**

- ☐ New Construction
- ☐ Demolition
- ☐ Awnings
- ☐ Fence
- X Repairs or Alterations
- ☐ Landscaping
- ☐ Exterior Architectural Features
- ☐ Exterior Environmental Feature Change
- ☐ Moving a Building
- ☐ Sign Erection
- ☐ Sign Placement *

*** (NOTE – Business License required before signage installation)**

Please describe your proposed work as simply and accurately as possible. Use the attached submittal criteria checklist to guide you in your description. Be sure to indicate materials to be used. Accurate drawings and photographs are required. (Use extra sheet, if necessary.) **Signed and sealed drawings from an architect, engineer or other design professional are required when construction of a new building, alterations and/or additions to existing structures are being made (Code 800.14.1).**

new addition to existing house

Important: This form must be completed before the Historic Preservation Commission will consider the approval of any material change to a property within a Historic District. This form, along with supporting documents must be filed with 1 Original (4) copies including color photos (excluding models, material and color samples, where one (1) is sufficient). The application and supporting documents are to be placed on a **CD in a PDF format**.

Incomplete applications will not be docketed for consideration by the Historic Preservation Commission.

The City of Kennesaw will not issue any permits until 7 days after the Commission's decision, per City Ordinance No. 2003-51, Section Two. 800.20 –Any person or persons jointly or severally aggrieved by any decision of the Kennesaw HPC may appeal to the Mayor and City Council. The appeal must be filed within 7 days of the decision of the Commission and must be made by written petition delivered to the zoning administrator. The appeal shall be on the application exactly as presented to the commission.

David J Brown — 10/31 2024

Signature of Applicant — **Date**

10/31/2024

Signature of Owner — **Date**

(If different from applicant, consenting to work to be performed on said property.

CERTIFICATE OF APPROPRIATENESS

APPROVAL SIGNATURES

_____

Darryl Simmons (Application Deemed Complete)
Planning & Zoning Administrator Date: _____

_____

(Application Administratively Approved)
HPC Chair Date: _____

☐ GRANTED
☐ DENIED Reason for denial _____
☐ REQUIRES HPC APPROVAL

Historic Preservation Commission consideration:

HEARING DATE:_____

ACTION BY COMMISSION:

☐ GRANTED

☐ DENIED

APPROVED WITH CONDITIONS:

_____

_____

DENIED: Reason for denial

_____

_____

(May re-submit within 60 days)

POSTPONED/TABLED_____

_____

Signature, Historic Preservation Commission Date

Upon Administrative Approval scan and send document to Commission for review

CSC.2023.01.022

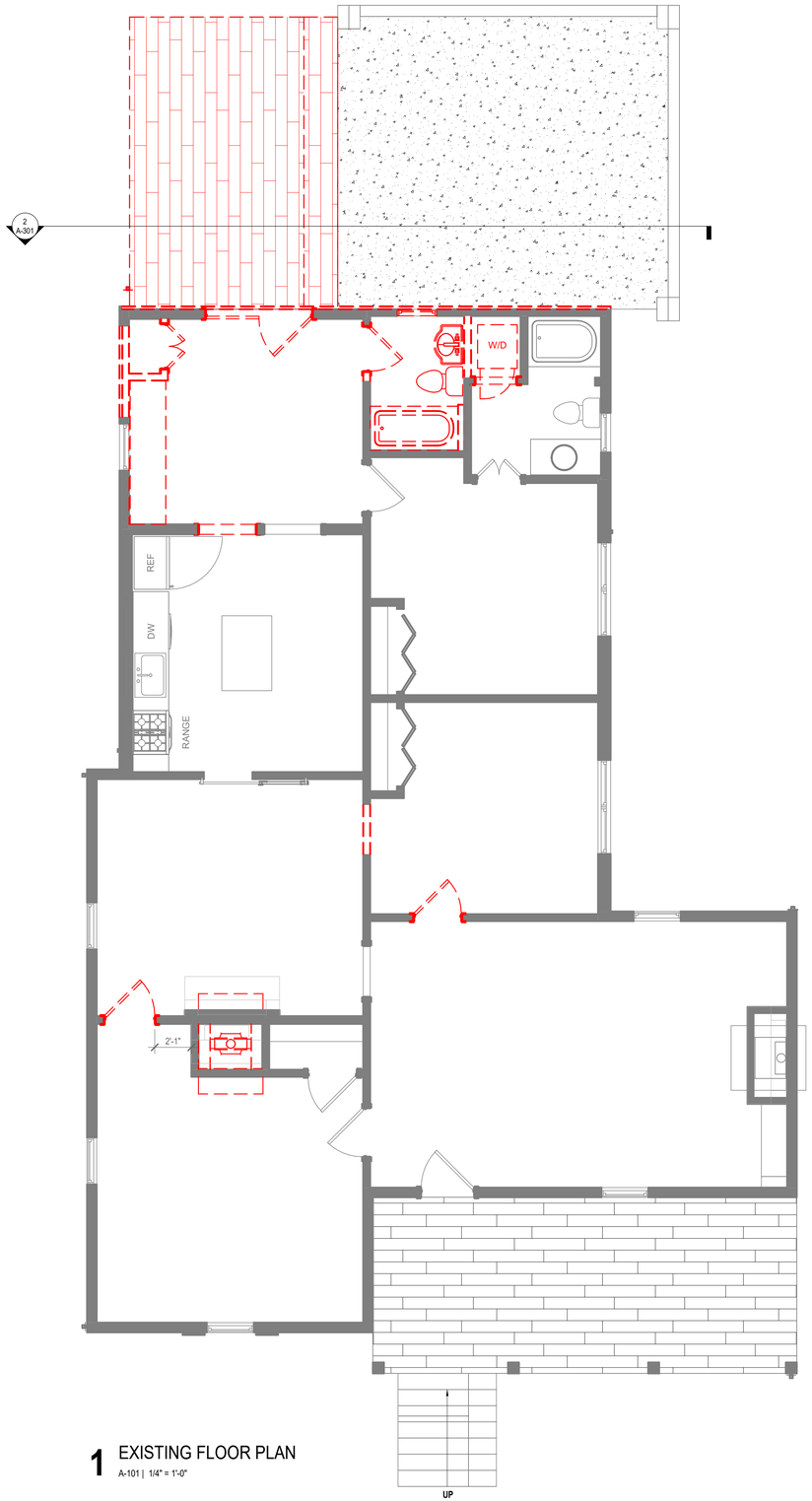

1 EXISTING FLOOR PLAN
A-101 | 1/4" = 1'-0"

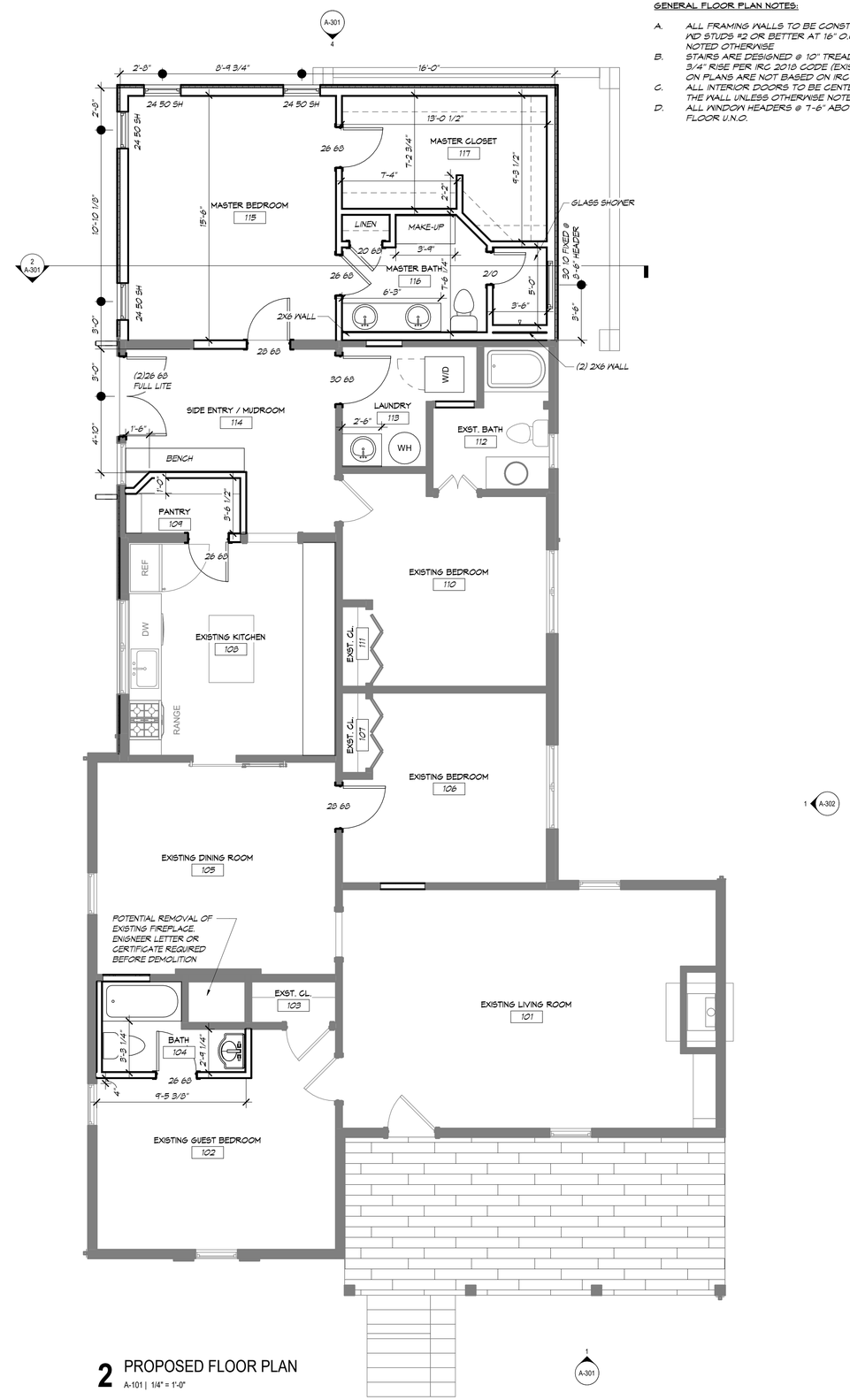

2 PROPOSED FLOOR PLAN
A-101 | 1/4" = 1'-0"

GENERAL FLOOR PLAN NOTES:

A. ALL FRAMING WALLS TO BE CONSTRUCTED W/ 2X4 WD STUDS #2 OR BETTER AT 16" O.C. UNLESS NOTED OTHERWISE
B. STAIRS ARE DESIGNED @ 10" TREAD DEPTH & 7 3/4" RISE PER IRC 2018 CODE (EXISTING STAIRS ON PLANS ARE NOT BASED ON IRC 2018)
C. ALL INTERIOR DOORS TO BE CENTERED OR 6" OFF THE WALL UNLESS OTHERWISE NOTED
D. ALL WINDOW HEADERS @ 7'-6" ABOVE FINISH FLOOR U.N.O.

CSC DESIGN, INC.
ARCHITECTS & ENGINEERS
135 P RICKMAN INDUSTRIAL DR.
SUITE 100 CANTON, GA 30115
Phone: (770) 345-2579

© 2023, CSC Design. These drawings are protected by the copyright laws of the United States. These drawings or any part thereof may not be used for any purpose or reproduced in any form or by any means without the written consent of CSC Design.

PROJECT NUMBER: 24.062

REVISIONS
NO: DATE: ISSUE:

COLLIE RESIDENCE

2986 N MAIN STREET
KENNESAW, GA 30144

FLOOR PLANS

A-101

CONCEPT

P:\24-062 Collie Residence_Kennesaw, GA\Arch\00 REVIT\24-062 Collie Residence.rte

11/5/2024 11:37:13 AM

CSC.2023.01.022

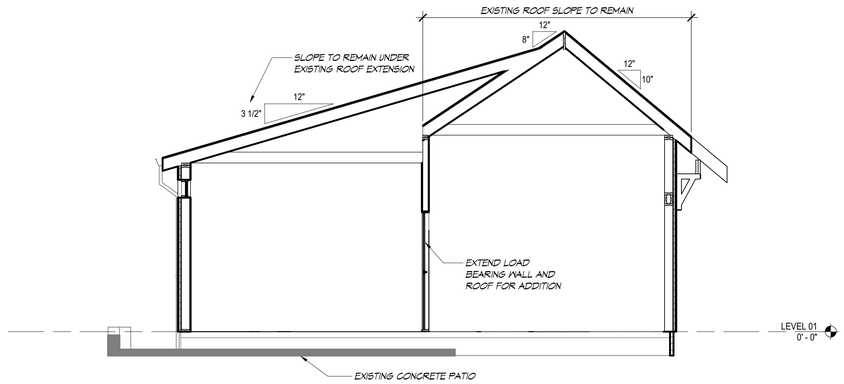

2 SECTION OF EXPANSION
A-301 | 1/4" = 1'-0"

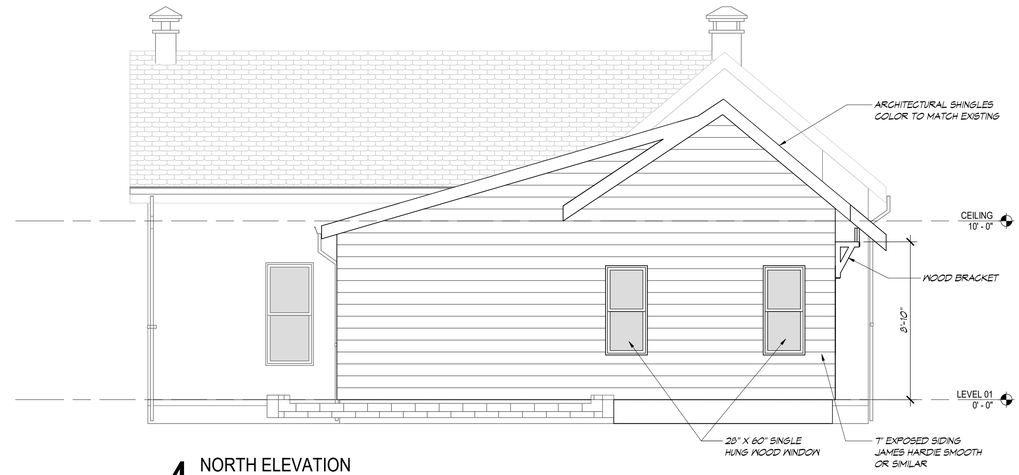

4 NORTH ELEVATION
A-301 | 1/4" = 1'-0"

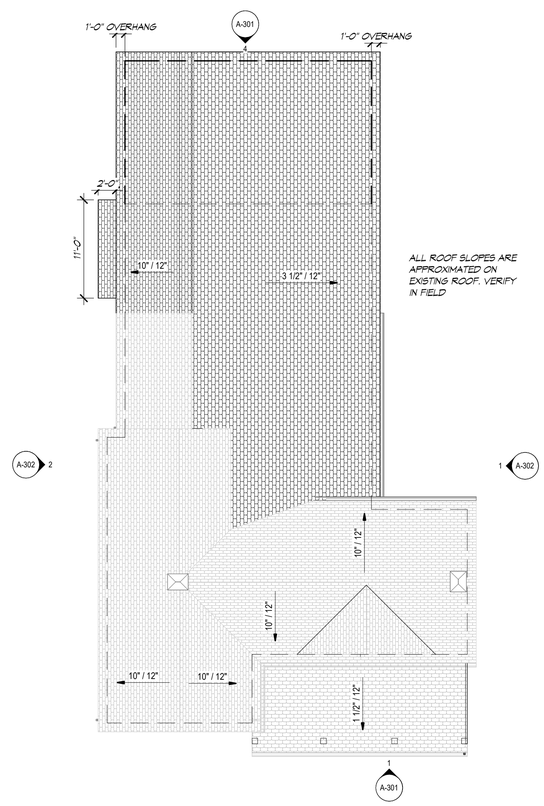

3 EXISTING ROOF PLAN
A-301 | 1/8" = 1'-0"

1 SOUTH ELEVATION
A-301 | 1/4" = 1'-0"

P:\24-062 Collie Residence_Kennesaw, GA\Arch\00 REVIT\24-062 Collie Residence.rte

11/5/2024 11:37:14 AM

CSC DESIGN, INC.
ARCHITECTS & ENGINEERS
135 P RICKMAN INDUSTRIAL DR.
SUITE 100 CANTON, GA 30115
Phone: (770) 345-2579

© 2023, CSC Design. These drawings are protected by the copyright laws of the United States. These drawings or any part thereof may not be used for any purpose or reproduced in any form or by any means without the written consent of CSC Design.

PROJECT NUMBER: 24.062

REVISIONS
NO: DATE: ISSUE:

COLLIE RESIDENCE

2986 N MAIN STREET
KENNESAW, GA 30144

EXTERIOR ELEVATIONS / ROOF PLAN / SECTION

A-301

CONCEPT

CSC.2023.01.022

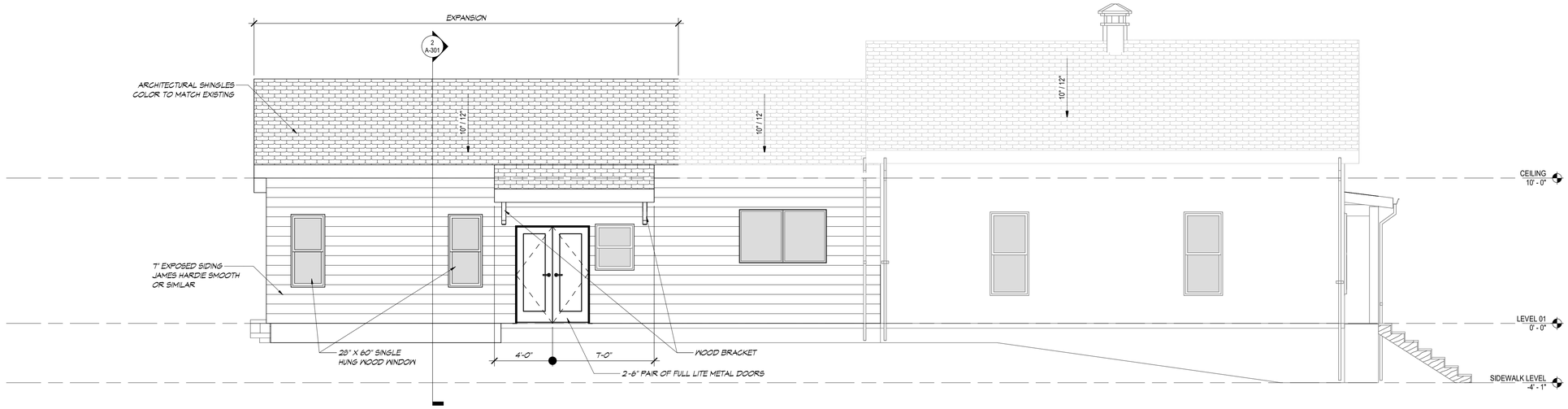

2 WEST ELEVATION

A-302 | 1/4" = 1'-0"

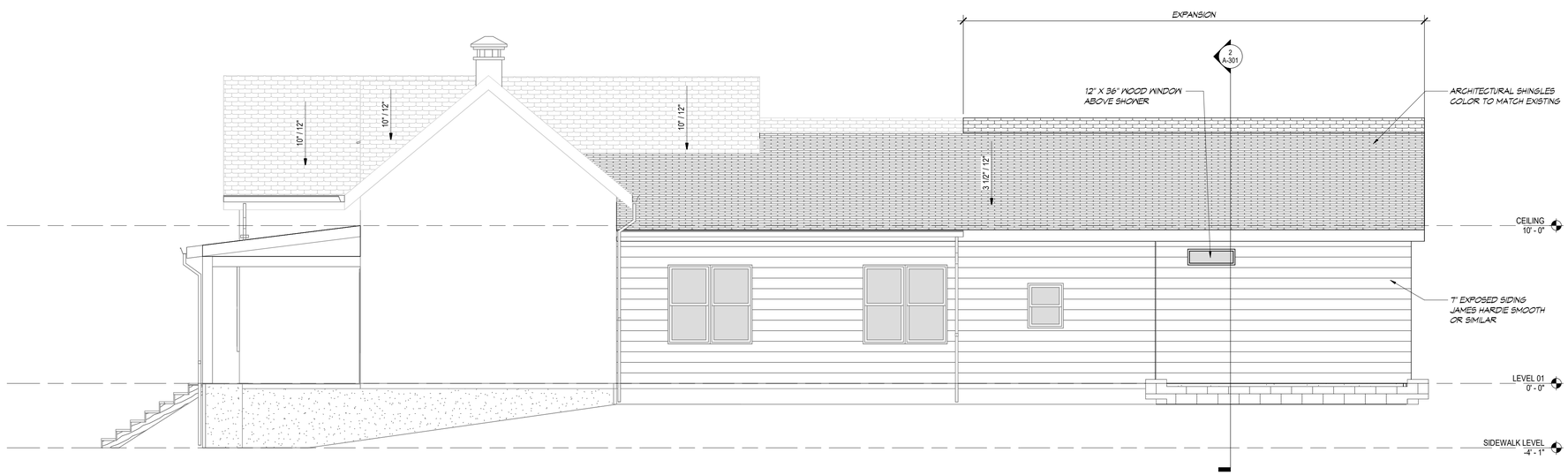

1 EAST ELEVATION

A-302 | 1/4" = 1'-0"

11/5/2024 11:37:15 AM P:\24-062 Collie Residence_Kennesaw, GA\Arch\00 REVIT\24-062 Collie Residence.rte

CSC DESIGN, INC.
ARCHITECTS & ENGINEERS
135 P RICKMAN INDUSTRIAL DR.
SUITE 100 CANTON, GA 30115
Phone: (770) 345-2579

© 2023, CSC Design. These drawings are protected by the copyright laws of the United States. These drawings or any part thereof may not be used for any purpose or reproduced in any form or by any means without the written consent of CSC Design.

PROJECT NUMBER: 24.062

REVISIONS
NO: DATE: ISSUE:

COLLIE RESIDENCE

2986 N MAIN STREET
KENNESAW, GA 30144

EXTERIOR ELEVATIONS

A-302

CONCEPT

welcome

2986

HUSKY

Certificate of Appropriateness

Is hereby granted by Approval by the

Historic Preservation Commission

to: Galt Commons Homeowners Association, Inc.

For: 1924 Galt Commons

Scope of Work: Installation of new community sign for Galt Commons

Darryl Simmons

Darryl Simmons, Administrator
Planning & Zoning Department

09/03/2024

Date

Kevin Whipple

Kevin Whipple, Chairperson
Historic Preservation Commission

09/03/2024

Date

Expires
09/03/2025

CERTIFICATE OF APPROPRIATENESS APPLICATION

☒ Application Fee: $50.00 □ Demolition Fee: $150.00

All new construction and exterior remodeling of buildings within the Kennesaw Historic District shall be subject to the architectural review and approval of the Historic Preservation Commission (**HPC**). HPC approval is also required for Kennesaw Downtown Development Authority (KDDA) Façade and Signage Grants.

Darryl Simmons, Planning and Zoning Administrator for the City of Kennesaw will meet with you to direct your application process. To make an appointment, please call 770-590-8268.

A Certificate of Appropriateness (COA) shall be obtained from the **HPC** prior to the issuance of a building permit. The **HPC** shall consider a variety of issues in rendering its decision including, but not limited to the following:

a. The surrounding development
b. The best interest of the community
c. Previous studies undertaken by the City as well as the standards contained herein.

Application for signage to include

□ Material Specifications
□ Drawing of Sign with Dimensions and Colors to be used
□ Façade detail of fonts

Application for landscaping to include

□ Variety of trees and shrubs
□ Indicate size and location of plantings

Application for exterior renovations and additions to include

□ Existing conditions site plan depicting location of addition in relation to the existing property
□ Existing floor plan of building
□ Proposed floor plan of building including portions not to be altered
□ Elevations of all exterior façade of addition including relationship to existing building
□ Detail of trim to be utilized on façade
□ Manufacturer's specifications for windows, doors and lighting that will be installed-including a photograph or sketch
□ Photographs of all existing facades; existing structures adjacent to property; and views from the façade to be altered

CONSISTENT WITH THE UNITED STATES CONSTITUTION AND THE RELIGIOUS LAND USE AND INSTITUTIONALIZED PERSONS ACT OF 2000, THE CITY OF KENNESAW DOES NOT DISCRIMINATE ON THE BASIS OF RELIGION IN THE APPLICATION OF ITS LAWS, POLICIES, OR PROCEDURES, INCLUDING THE APPLICATION OF ITS LAND USE REGULATIONS AND ZONING LAWS.

Under the Religious Land Use and Institutionalized Persons Act of 2000 ("RLUIPA"), no government, including the City of Kennesaw, may apply its zoning or land use laws in a manner that imposes a substantial burden on the religious exercise of a person, including a religious assembly or institution. RLUIPA also provides that no government, including the City of Kennesaw, may apply a land use regulation in a manner that treats a religious assembly or institution (a church, for example) on less than equal terms than a nonreligious institution or assembly (a day care center or movie theater, for example). Finally, RLUIPA provides that no government, including the City of Kennesaw, may impose or implement a land use regulation in a manner that discriminates against a religious assembly or institution.

If you believe that the City of Kennesaw, or any other local government or municipality, has discriminated against you in the implementation of its zoning or land use laws, please contact the United States Department of Justice.

United States Department of Justice
Civil Rights Division
Housing and Civil Enforcement Section
950 Pennsylvania Ave. N.W. –G St.
Washington, DC 20530

1. **NAME OF APPLICANT:** Galt Commons Homeowners Association, Inc.
   - [x] Owner
   - [ ] Other
   - [ ] Other, please specify _____

   APPLICANT MAILING ADDRESS: 3018 Cherokee St. NW

   Kennesaw GA 30144

   (Home#)_____ (Cell#) [redacted] _____ (Email) [redacted]

   PROPERTY ADDRESS: 1924 Galt Commons, Kennesaw GA 30144

   Land Lot 129 Tax Parcel 20013803870 Lot Size .015

   Current zoning on property: CBD

2. **NAME OF ATTORNEY OR REPRESENTATIVE:**

   Chad Howie

   (Home#)_____ (Cell#) [redacted] ____ (Email) [redacted]

   NAME OF OWNER:

   Old Cherokee JV, LLC

   (Home#)_____ (Cell#) [redacted] ___ (Email) [redacted]

3. **ACTIVITY**

   - [ ] New Construction
   - [ ] Demolition
   - [ ] Awnings
   - [ ] Fence
   - [ ] Repairs or Alterations
   - [ ] Landscaping
   - [ ] Exterior Architectural Features
   - [ ] Exterior Environmental Feature Change
   - [ ] Moving a Building
   - [x] Sign Erection
   - [ ] Sign Placement *

   *** (NOTE – Business License required before signage installation)**

Please describe your proposed work as simply and accurately as possible. Use the attached submittal criteria checklist to guide you in your description. Be sure to indicate materials to be used. Accurate drawings and photographs are required. (Use extra sheet, if necessary.) **Signed and sealed drawings from an architect, engineer or other design professional are required when construction of a new building, alterations and/or additions to existing structures are being made (Code 800.14.1).**

Installation of new community sign.

Important: This form must be completed before the Historic Preservation Commission will consider the approval of any material change to a property within a Historic District. This form, along with supporting documents must be filed with 1 Original (4) copies including color photos (excluding models, material and color samples, where one (1) is sufficient). The application and supporting documents are to be placed on a **CD in a PDF format**.

Incomplete applications will not be docketed for consideration by the Historic Preservation Commission.

The City of Kennesaw will not issue any permits until 7 days after the Commission's decision, per City Ordinance No. 2003-51, Section Two. 800.20 –Any person or persons jointly or severally aggrieved by any decision of the Kennesaw HPC may appeal to the Mayor and City Council. The appeal must be filed within 7 days of the decision of the Commission and must be made by written petition delivered to the zoning administrator. The appeal shall be on the application exactly as presented to the commission.

08/27/2024

Signature of Applicant **Date**

08/27/2024

Signature of Owner **Date**

(If different from applicant, consenting to work to be performed on said property.

CERTIFICATE OF APPROPRIATENESS

APPROVAL SIGNATURES

Darryl Simmons (Application Deemed Complete)
Planning & Zoning Administrator Date: 9/3/24

(Application Administratively Approved)
HPC Chair Date: 9/2/24

☑ GRANTED
☐ DENIED Reason for denial _____
☐ REQUIRES HPC APPROVAL

Historic Preservation Commission consideration:

HEARING DATE: _____

ACTION BY COMMISSION:

☐ GRANTED

☐ DENIED

APPROVED WITH CONDITIONS:

_____

_____

DENIED: Reason for denial

_____

_____

(May re-submit within 60 days)

POSTPONED/TABLED _____

_____

Signature, Historic Preservation Commission Date

Upon Administrative Approval scan and send document to Commission for review

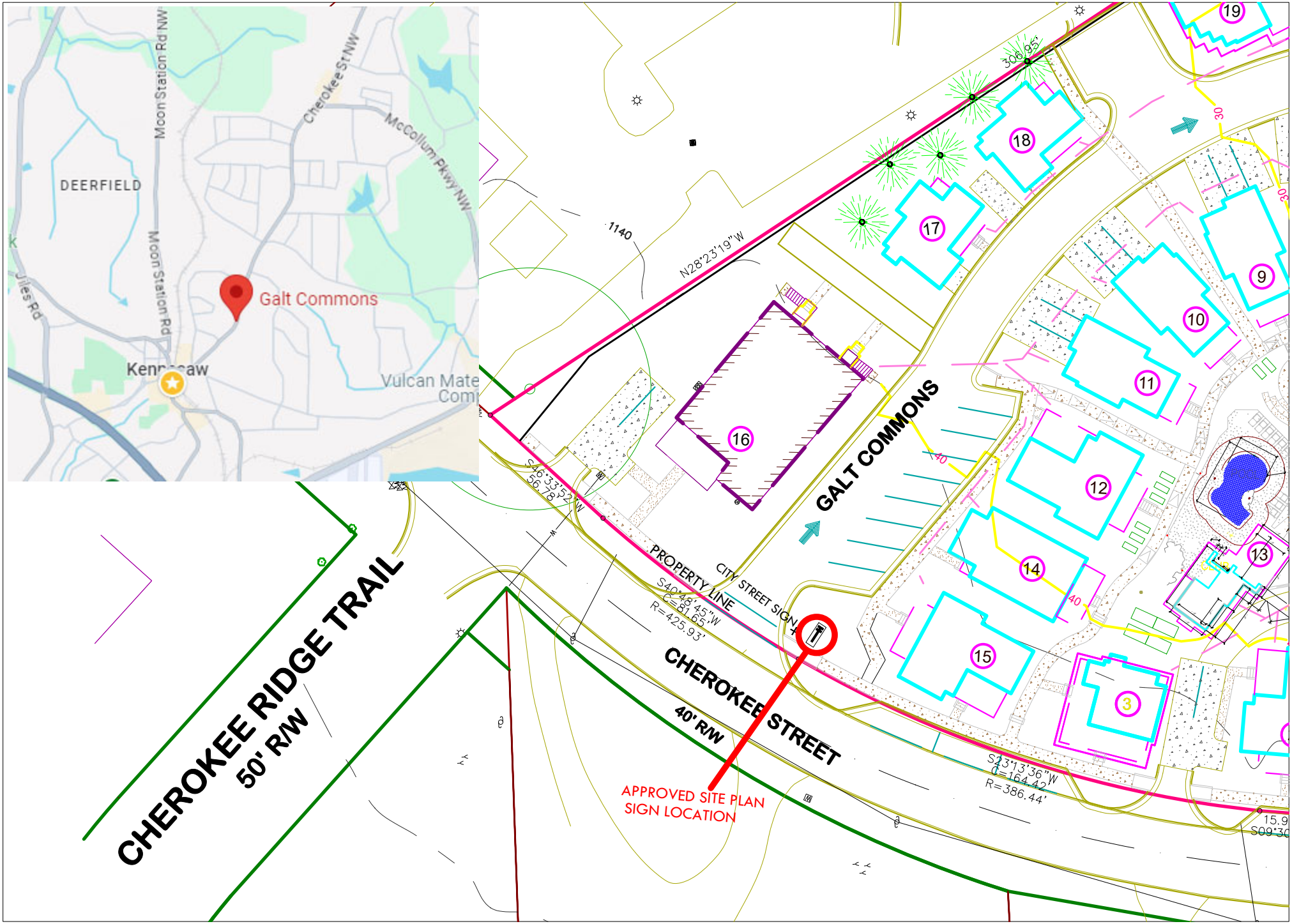

GALT COMMONS SIGN LOCATION AREA MAP

ELEVATION:
CHEROKEE ST - SOUTH BOUND

ELEVATION:
CHEROKEE ST - NORTH BOUND

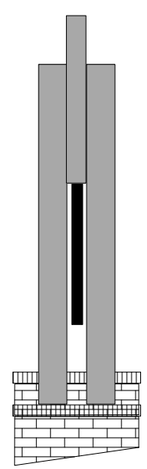

ELEVATION:
CHEROKEE ST - EAST WEST

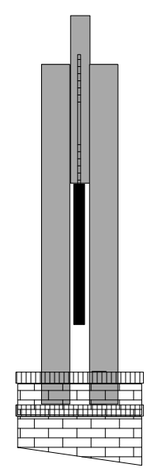

ELEVATION:
CHEROKEE ST - EAST VIEW

GALT COMMONS
COMMUNITY
ENTRY SIGN
8/22/2024

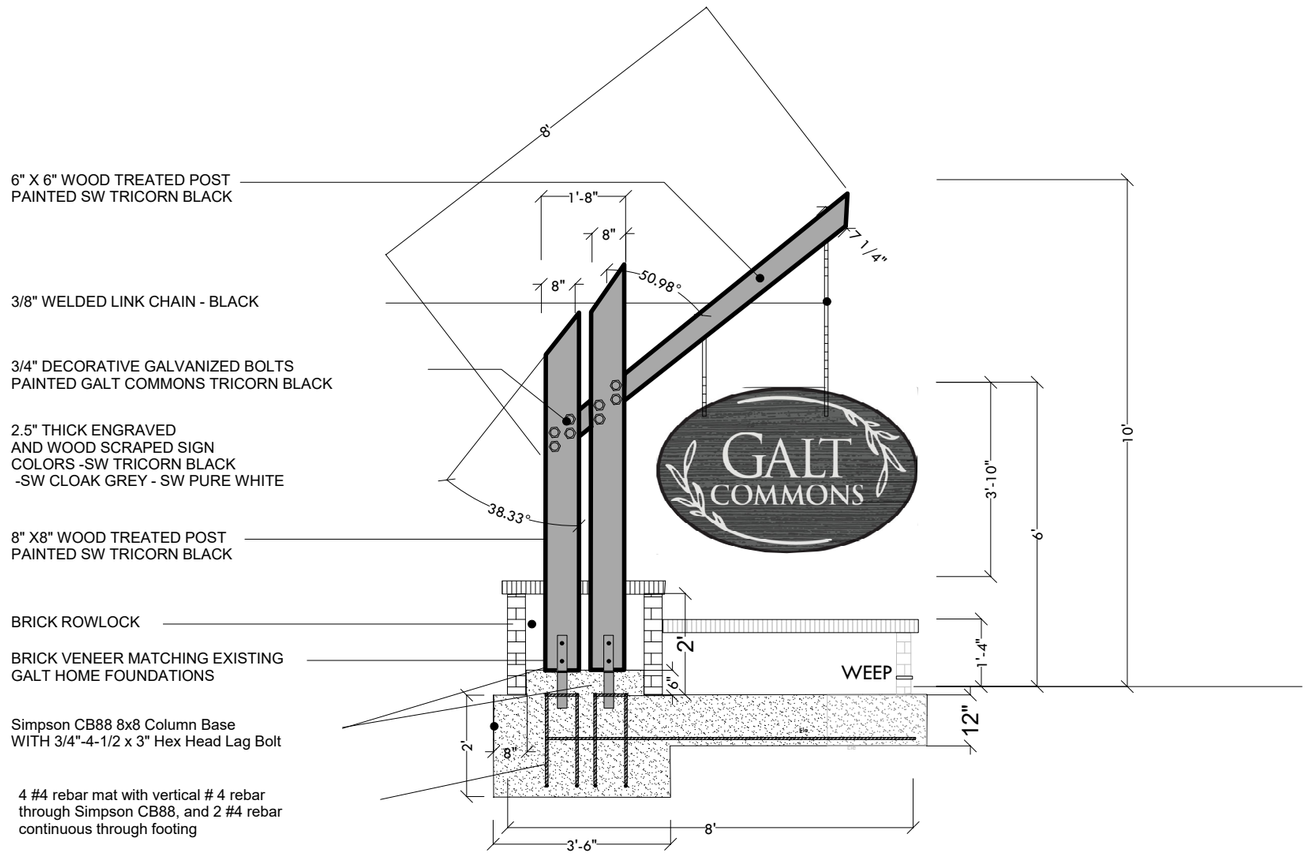

SIDE ELEVATION DETAILS

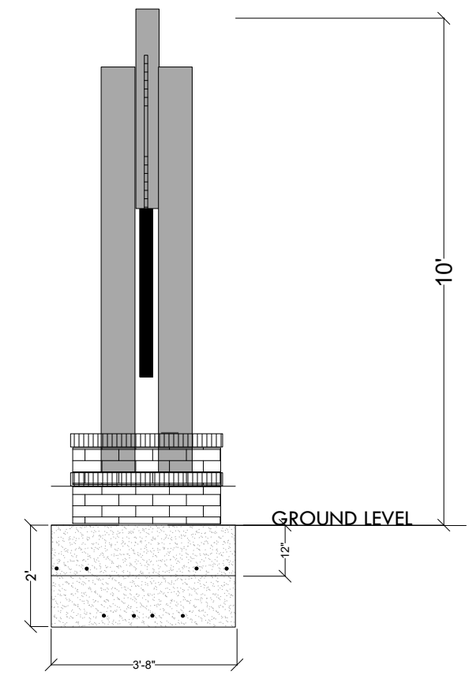

SIDE ELEVATION DETAILS

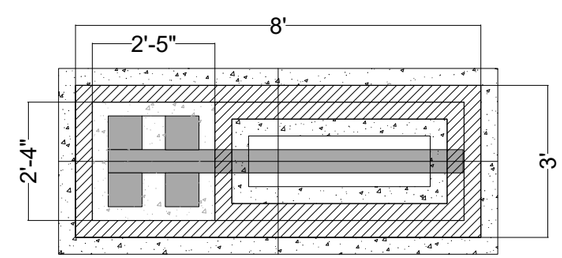

SIDE ELEVATION DETAILS

GALT COMMONS
COMMUNITY
ENTRY SIGN

Certificate of Appropriateness

Is hereby granted by Approval by the

Historic Preservation Commission

to: Geoffrey F. Drake

For: 2078 Cherokee Ridge Trail

Scope of Work: Re-roofing

Darryl Simmons

Darryl Simmons, Administrator
Planning & Zoning Department

10/03/2024

Date

Kevin Whipple

Kevin Whipple, Chairperson
Historic Preservation Commission

10/03/2024

Date

Expires
10/03/2025

CERTIFICATE OF APPROPRIATENESS APPLICATION

☐ Application Fee: $50.00 ☐ Demolition Fee: $150.00

All new construction and exterior remodeling of buildings within the Kennesaw Historic District shall be subject to the architectural review and approval of the Historic Preservation Commission (**HPC**). HPC approval is also required for Kennesaw Downtown Development Authority (KDDA) Façade and Signage Grants.

Darryl Simmons, Planning and Zoning Administrator for the City of Kennesaw will meet with you to direct your application process. To make an appointment, please call 770-590-8268.

A Certificate of Appropriateness (COA) shall be obtained from the **HPC** prior to the issuance of a building permit. The **HPC** shall consider a variety of issues in rendering its decision including, but not limited to the following:

a. The surrounding development
b. The best interest of the community
c. Previous studies undertaken by the City as well as the standards contained herein.

Application for signage to include

☐ Material Specifications
☐ Drawing of Sign with Dimensions and Colors to be used
☐ Façade detail of fonts

Application for landscaping to include

☐ Variety of trees and shrubs
☐ Indicate size and location of plantings

Application for exterior renovations and additions to include

☐ Existing conditions site plan depicting location of addition in relation to the existing property
☐ Existing floor plan of building
☐ Proposed floor plan of building including portions not to be altered
☐ Elevations of all exterior façade of addition including relationship to existing building
☐ Detail of trim to be utilized on façade
☐ Manufacturer's specifications for windows, doors and lighting that will be installed-including a photograph or sketch
☐ Photographs of all existing facades; existing structures adjacent to property; and views from the façade to be altered

CONSISTENT WITH THE UNITED STATES CONSTITUTION AND THE RELIGIOUS LAND USE AND INSTITUTIONALIZED PERSONS ACT OF 2000, THE CITY OF KENNESAW DOES NOT DISCRIMINATE ON THE BASIS OF RELIGION IN THE APPLICATION OF ITS LAWS, POLICIES, OR PROCEDURES, INCLUDING THE APPLICATION OF ITS LAND USE REGULATIONS AND ZONING LAWS.

Under the Religious Land Use and Institutionalized Persons Act of 2000 ("RLUIPA"), no government, including the City of Kennesaw, may apply its zoning or land use laws in a manner that imposes a substantial burden on the religious exercise of a person, including a religious assembly or institution. RLUIPA also provides that no government, including the City of Kennesaw, may apply a land use regulation in a manner that treats a religious assembly or institution (a church, for example) on less than equal terms than a nonreligious institution or assembly (a day care center or movie theater, for example). Finally, RLUIPA provides that no government, including the City of Kennesaw, may impose or implement a land use regulation in a manner that discriminates against a religious assembly or institution.

If you believe that the City of Kennesaw, or any other local government or municipality, has discriminated against you in the implementation of its zoning or land use laws, please contact the United States Department of Justice.

United States Department of Justice
Civil Rights Division
Housing and Civil Enforcement Section
950 Pennsylvania Ave. N.W. –G St.
Washington, DC 20530

1. **NAME OF APPLICANT:** Geoffrey F. Drake
   - ☒ Owner
   - ☐ Other
   - ☐ Other, please specify _____

APPLICANT MAILING ADDRESS: 2078 Cherokee Ridge Trail Northwest Kennesaw, Ga. 30144

(Home#) [redacted] (Cell#) [redacted] (Email) [redacted]

PROPERTY ADDRESS: 2078 Cherokee Ridge Trail [redacted] NW Kennesaw, GA. 30144

Land Lot 138 Tax Parcel 20013802330 Lot Size 0.237

Current zoning on property: Residential

2. **NAME OF ATTORNEY OR REPRESENTATIVE:**

PHILLIPS ROOFING DANNY PHILLIPS

(Home#) [redacted] (Cell#) [redacted] Email) [redacted]

NAME OF OWNER:

Geoffrey F Drake

(Home#) [redacted] (Cell#) [redacted] (Email) [redacted]

3. **ACTIVITY**

- ☐ New Construction
- ☐ Demolition
- ☐ Awnings
- ☐ Fence
- ☒ Repairs or Alterations
- ☐ Landscaping
- ☐ Exterior Architectural Features
- ☐ Exterior Environmental Feature Change
- ☐ Moving a Building
- ☐ Sign Erection
- ☐ Sign Placement *

*** (NOTE – Business License required before signage installation)**

Please describe your proposed work as simply and accurately as possible. Use the attached submittal criteria checklist to guide you in your description. Be sure to indicate materials to be used. Accurate drawings and photographs are required. (Use extra sheet, if necessary.) **Signed and sealed drawings from an architect, engineer or other design professional are required when construction of a new building, alterations and/or additions to existing structures are being made (Code 800.14.1).**

TEAR OFF FELT SH WITH SYNTHETIC FELT
AND REROOF WITH GAF TIMBERLINE HDZ
ARCHITECTURE SHINGLES. INSTALL
DRIP EDGING AROUND ENTIRE HOUSE.
INSTALL COBRA RIDGE VENT

Important: This form must be completed before the Historic Preservation Commission will consider the approval of any material change to a property within a Historic District. This form, along with supporting documents must be filed with 1 Original (4) copies including color photos (excluding models, material and color samples, where one (1) is sufficient). The application and supporting documents are to be placed on a **CD in a PDF format.**

Incomplete applications will not be docketed for consideration by the Historic Preservation Commission.

The City of Kennesaw will not issue any permits until 7 days after the Commission's decision, per City Ordinance No. 2003-51, Section Two. 800.20 –Any person or persons jointly or severally aggrieved by any decision of the Kennesaw HPC may appeal to the Mayor and City Council. The appeal must be filed within 7 days of the decision of the Commission and must be made by written petition delivered to the zoning administrator. The appeal shall be on the application exactly as presented to the commission.

Geoffrey Drake — 10-01-2024
Signature of Applicant — **Date**

Danny Phillips — 10-2-24
Signature of Owner — **Date**
(If different from applicant, consenting to work to be performed on said property.

CERTIFICATE OF APPROPRIATENESS

APPROVAL SIGNATURES

Darryl Simmons (Application Deemed Complete)
Planning & Zoning Administrator Date: 10-3-24

(Application Administratively Approved)
HPC Chair Date: 10/03/2024

✓ GRANTED
[ ] DENIED Reason for denial _____
[ ] REQUIRES HPC APPROVAL

Historic Preservation Commission consideration:

HEARING DATE: _____

ACTION BY COMMISSION:

[ ] GRANTED

[ ] DENIED

APPROVED WITH CONDITIONS:

_____

_____

DENIED: Reason for denial

_____

_____

(May re-submit within 60 days)

POSTPONED/TABLED _____

Signature, Historic Preservation Commission Date

Upon Administrative Approval scan and send document to Commission for review

Certificate of Appropriateness

Is hereby granted by Approval by the

Historic Preservation Commission

to: Kimberly Watkins

For: 2975 N. Main St.

Scope of Work: Installation of a walkway from the front porch steps to the sidewalk

Darryl Simmons

Darryl Simmons, Administrator
Planning & Zoning Department

10/17/2024

Date

Kevin Whipple

Kevin Whipple, Chairperson
Historic Preservation Commission

10/17/2024

Date

Expires
10/17/2025

CERTIFICATE OF APPROPRIATENESS APPLICATION

☒ Application Fee: $50.00 ☐ Demolition Fee: $150.00

All new construction and exterior remodeling of buildings within the Kennesaw Historic District shall be subject to the architectural review and approval of the Historic Preservation Commission (**HPC**). HPC approval is also required for Kennesaw Downtown Development Authority (KDDA) Façade and Signage Grants.

Darryl Simmons, Planning and Zoning Administrator for the City of Kennesaw will meet with you to direct your application process. To make an appointment, please call 770-590-8268.

A Certificate of Appropriateness (COA) shall be obtained from the **HPC** prior to the issuance of a building permit. The **HPC** shall consider a variety of issues in rendering its decision including, but not limited to the following:

a. The surrounding development
b. The best interest of the community
c. Previous studies undertaken by the City as well as the standards contained herein.

Application for signage to include

☐ Material Specifications
☐ Drawing of Sign with Dimensions and Colors to be used
☐ Façade detail of fonts

Application for landscaping to include

☐ Variety of trees and shrubs
☐ Indicate size and location of plantings

Application for exterior renovations and additions to include

☐ Existing conditions site plan depicting location of addition in relation to the existing property
☐ Existing floor plan of building
☐ Proposed floor plan of building including portions not to be altered
☐ Elevations of all exterior façade of addition including relationship to existing building
☐ Detail of trim to be utilized on façade
☐ Manufacturer's specifications for windows, doors and lighting that will be installed-including a photograph or sketch
☐ Photographs of all existing facades; existing structures adjacent to property; and views from the façade to be altered

CONSISTENT WITH THE UNITED STATES CONSTITUTION AND THE RELIGIOUS LAND USE AND INSTITUTIONALIZED PERSONS ACT OF 2000, THE CITY OF KENNESAW DOES NOT DISCRIMINATE ON THE BASIS OF RELIGION IN THE APPLICATION OF ITS LAWS, POLICIES, OR PROCEDURES, INCLUDING THE APPLICATION OF ITS LAND USE REGULATIONS AND ZONING LAWS.

Under the Religious Land Use and Institutionalized Persons Act of 2000 ("RLUIPA"), no government, including the City of Kennesaw, may apply its zoning or land use laws in a manner that imposes a substantial burden on the religious exercise of a person, including a religious assembly or institution. RLUIPA also provides that no government, including the City of Kennesaw, may apply a land use regulation in a manner that treats a religious assembly or institution (a church, for example) on less than equal terms than a nonreligious institution or assembly (a day care center or movie theater, for example). Finally, RLUIPA provides that no government, including the City of Kennesaw, may impose or implement a land use regulation in a manner that discriminates against a religious assembly or institution.

If you believe that the City of Kennesaw, or any other local government or municipality, has discriminated against you in the implementation of its zoning or land use laws, please contact the United States Department of Justice.

United States Department of Justice
Civil Rights Division
Housing and Civil Enforcement Section
950 Pennsylvania Ave. N.W. –G St.
Washington, DC 20530

1. **NAME OF APPLICANT:** Kimberly Watkins
   - [x] Owner
   - [ ] Other
   - [ ] Other, please specify _____

   APPLICANT MAILING ADDRESS: 2975 N. Main St. NW

   _____

   (Home#)_____ (Cell#) [redacted] _____ (Email) [redacted]

   PROPERTY ADDRESS: 2975 N. Main St. NW

   Land Lot 20013900190 Tax Parcel 20013900190 Lot Size 0.843

   Current zoning on property: Single family residential

2. **NAME OF ATTORNEY OR REPRESENTATIVE:**

   NA

   (Home#)_____ (Cell#) _____ (Email) _____

   NAME OF OWNER:

   Kimberly Watkins

   (Home#)_____ (Cell#) [redacted] _____ (Email) [redacted]

3. **ACTIVITY**

   - [ ] New Construction
   - [ ] Demolition
   - [ ] Awnings
   - [ ] Fence
   - [ ] Repairs or Alterations
   - [ ] Landscaping
   - [x] Exterior Architectural Features
   - [ ] Exterior Environmental Feature Change
   - [ ] Moving a Building
   - [ ] Sign Erection
   - [ ] Sign Placement *

   *** (NOTE – Business License required before signage installation)**

Please describe your proposed work as simply and accurately as possible. Use the attached submittal criteria checklist to guide you in your description. Be sure to indicate materials to be used. Accurate drawings and photographs are required. (Use extra sheet, if necessary.) **Signed and sealed drawings from an architect, engineer or other design professional are required when construction of a new building, alterations and/or additions to existing structures are being made (Code 800.14.1).**

Installation of a walkway from front porch steps to the sidewalk. Hexagonal stones to match timeframe of structure. No landscaping or hedges. Photos included to show style and concept.

Important: This form must be completed before the Historic Preservation Commission will consider the approval of any material change to a property within a Historic District. This form, along with supporting documents must be filed with 1 Original (4) copies including color photos (excluding models, material and color samples, where one (1) is sufficient). The application and supporting documents are to be placed on a **CD in a PDF format**.

In Process

Incomplete applications will not be docketed for consideration by the Historic Preservation Commission.

The City of Kennesaw will not issue any permits until 7 days after the Commission's decision, per City Ordinance No. 2003-51, Section Two. 800.20 –Any person or persons jointly or severally aggrieved by any decision of the Kennesaw HPC may appeal to the Mayor and City Council. The appeal must be filed within 7 days of the decision of the Commission and must be made by written petition delivered to the zoning administrator. The appeal shall be on the application exactly as presented to the commission.

DocuSigned by:
Kimberly Watkins
5ADE7060AB164D1...

October 4, 2024

Signature of Applicant **Date**

DocuSigned by:
Kimberly Watkins
5ADE7060AB164D1...

October 4, 2024

Signature of Owner **Date**

(If different from applicant, consenting to work to be performed on said property.

CERTIFICATE OF APPROPRIATENESS

APPROVAL SIGNATURES

Darryl Simmons (Application Deemed Complete)
Planning & Zoning Administrator

Date: 10-17-24

(Application Administratively Approved)
HPC Chair

Date: 10/17/2024

- [x] GRANTED
- [ ] DENIED Reason for denial _____
- [ ] REQUIRES HPC APPROVAL

Historic Preservation Commission consideration:

HEARING DATE:_____

ACTION BY COMMISSION:

- [ ] GRANTED
- [ ] DENIED

APPROVED WITH CONDITIONS:

_____

_____

DENIED: Reason for denial

_____

_____

(May re-submit within 60 days)

POSTPONED/TABLED_____

_____

Signature, Historic Preservation Commission Date

Upon Administrative Approval scan and send document to Commission for review

Five Hundred

Certificate of Appropriateness

Is hereby granted by Approval by the

Historic Preservation Commission

to: Chad Everett

For: 2065 Cherokee Ridge Trail

Scope of Work: Replacing front deck, keeping existing roof, and demo and replacing back deck.

Darryl Simmons

Darryl Simmons, Administrator
Planning & Zoning Department

10/17/2024

Date

Kevin Whipple

Kevin Whipple, Chairperson
Historic Preservation Commission

10/17/2024

Date

Expires
10/17/2025

1. **NAME OF APPLICANT:** CHAD EVERETT

☐ Owner
☐ Other
☑ Other, please specify AUTHORIZED PERMIT AGENT

APPLICANT MAILING ADDRESS: ~~135~~ 13225 VETERANS MEMORIAL HWY DOUGLASVILLE, GA. 30134

(Home#)_____ (Cell# [redacted] Email) [redacted]

PROPERTY ADDRESS: 2065 CHEROKEE RIDGE TRAIL

Land Lot _____ Tax Parcel _____ Lot Size _____

Current zoning on property: _____

2. **NAME OF ATTORNEY OR REPRESENTATIVE:**

_____

(Home#)_____ (Cell#) _____ (Email) _____

NAME OF OWNER:

VALERIE GUILER

(Home#)_____ (Cell#) [redacted] (Email) [redacted]

3. **ACTIVITY**

☐ New Construction
☐ Demolition
☐ Awnings
☐ Fence
☒ Repairs or Alterations
☐ Landscaping
☐ Exterior Architectural Features
☐ Exterior Environmental Feature Change
☐ Moving a Building
☐ Sign Erection
☐ Sign Placement *

*** (NOTE – Business License required before signage installation)**

CERTIFICATE OF APPROPRIATENESS APPLICATION

Preserving the Past for the Future
Historic Preservation Commission

□ Application Fee: $50.00 □ Demolition Fee: $150.00

All new construction and exterior remodeling of buildings within the Kennesaw Historic District shall be subject to the architectural review and approval of the Historic Preservation Commission (**HPC**). HPC approval is also required for Kennesaw Downtown Development Authority (KDDA) Façade and Signage Grants.

Darryl Simmons, Planning and Zoning Administrator for the City of Kennesaw will meet with you to direct your application process. To make an appointment, please call 770-590-8268.

A Certificate of Appropriateness (COA) shall be obtained from the **HPC** prior to the issuance of a building permit. The **HPC** shall consider a variety of issues in rendering its decision including, but not limited to the following:

a. The surrounding development
b. The best interest of the community
c. Previous studies undertaken by the City as well as the standards contained herein.

Application for signage to include

□ Material Specifications
□ Drawing of Sign with Dimensions and Colors to be used
□ Façade detail of fonts

Application for landscaping to include

□ Variety of trees and shrubs
□ Indicate size and location of plantings

Application for exterior renovations and additions to include

□ Existing conditions site plan depicting location of addition in relation to the existing property
□ Existing floor plan of building
□ Proposed floor plan of building including portions not to be altered
□ Elevations of all exterior façade of addition including relationship to existing building
□ Detail of trim to be utilized on façade
□ Manufacturer's specifications for windows, doors and lighting that will be installed-including a photograph or sketch
□ Photographs of all existing facades; existing structures adjacent to property; and views from the façade to be altered

CONSISTENT WITH THE UNITED STATES CONSTITUTION AND THE RELIGIOUS LAND USE AND INSTITUTIONALIZED PERSONS ACT OF 2000, THE CITY OF KENNESAW DOES NOT DISCRIMINATE ON THE BASIS OF RELIGION IN THE APPLICATION OF ITS LAWS, POLICIES, OR PROCEDURES, INCLUDING THE APPLICATION OF ITS LAND USE REGULATIONS AND ZONING LAWS.

Under the Religious Land Use and Institutionalized Persons Act of 2000 ("RLUIPA"), no government, including the City of Kennesaw, may apply its zoning or land use laws in a manner that imposes a substantial burden on the religious exercise of a person, including a religious assembly or institution. RLUIPA also provides that no government, including the City of Kennesaw, may apply a land use regulation in a manner that treats a religious assembly or institution (a church, for example) on less than equal terms than a nonreligious institution or assembly (a day care center or movie theater, for example). Finally, RLUIPA provides that no government, including the City of Kennesaw, may impose or implement a land use regulation in a manner that discriminates against a religious assembly or institution.

If you believe that the City of Kennesaw, or any other local government or municipality, has discriminated against you in the implementation of its zoning or land use laws, please contact the United States Department of Justice.

United States Department of Justice
Civil Rights Division
Housing and Civil Enforcement Section
950 Pennsylvania Ave. N.W. –G St.
Washington, DC 20530

Please describe your proposed work as simply and accurately as possible. Use the attached submittal criteria checklist to guide you in your description. Be sure to indicate materials to be used. Accurate drawings and photographs are required. (Use extra sheet, if necessary.) **Signed and sealed drawings from an architect, engineer or other design professional are required when construction of a new building, alterations and/or additions to existing structures are being made (Code 800.14.1).**

REPLACING FRONT DECK (WE ARE KEEPING EXISTING ROOF) INSTALLING NEW SUPPORT POSTS (PAINTED) CEDAR HANDRAIL DETAIL WITH BLACK ALUMINUM BALUSTERS

DEMO + REPLACE BACK DECK USING COMPOSITE DECKING WITH CEDAR HANDRAILS - BLACK ALUMINUM BALUSTERS. BACK DECK TO HAVE SHED STYLE ROOF WITH SCREENED ENCLOSURE

* CUSTOMER WOULD LIKE TO STAIN RAILINGS POST

COMPOSITE DECKING COLOR BRAND: ENVISION COLOR: SANDSTONE

Important: This form must be completed before the Historic Preservation Commission will consider the approval of any material change to a property within a Historic District. This form, along with supporting documents must be filed with 1 Original (4) copies including color photos (excluding models, material and color samples, where one (1) is sufficient). The application and supporting documents are to be placed on a **CD in a PDF format**.

Incomplete applications will not be docketed for consideration by the Historic Preservation Commission.

The City of Kennesaw will not issue any permits until 7 days after the Commission's decision, per City Ordinance No. 2003-51, Section Two. 800.20 –Any person or persons jointly or severally aggrieved by any decision of the Kennesaw HPC may appeal to the Mayor and City Council. The appeal must be filed within 7 days of the decision of the Commission and must be made by written petition delivered to the zoning administrator. The appeal shall be on the application exactly as presented to the commission.

10/7/2024

Signature of Applicant **Date**

Signature of Owner **Date**

(If different from applicant, consenting to work to be performed on said property.

Please describe your proposed work as simply and accurately as possible. Use the attached submittal criteria checklist to guide you in your description. Be sure to indicate materials to be used. Accurate drawings and photographs are required. (Use extra sheet, if necessary.) **Signed and sealed drawings from an architect, engineer or other design professional are required when construction of a new building, alterations and/or additions to existing structures are being made (Code 800.14.1).**

REPLACING FRONT DECK (WE ARE KEEPING EXISTING ROOF) INSTALLING NEW SUPPORT POSTS (PAINTED) CEDAR HANDRAIL DETAIL WITH BLACK ALUMINUM BALUSTERS

DEMO + REPLACE BACK DECK USING COMPOSITE DECKING WITH CEDAR HANDRAILS - BLACK ALUMINUM BALUSTERS. BACK DECK TO HAVE SITED STYLE ROOF WITH SCREENED ENCLOSURE

* CUSTOMER WOULD LIKE TO STAIN RAILINGS POST

COMPOSITE DECKING COLOR BRAND: ENVISION COLOR: SANDSTONE

Important: This form must be completed before the Historic Preservation Commission will consider the approval of any material change to a property within a Historic District. This form, along with supporting documents must be filed with 1 Original (4) copies including color photos (excluding models, material and color samples, where one (1) is sufficient). The application and supporting documents are to be placed on a **CD in a PDF format**.

Incomplete applications will not be docketed for consideration by the Historic Preservation Commission.

The City of Kennesaw will not issue any permits until 7 days after the Commission's decision, per City Ordinance No. 2003-51, Section Two. 800.20 -Any person or persons jointly or severally aggrieved by any decision of the Kennesaw HPC may appeal to the Mayor and City Council. The appeal must be filed within 7 days of the decision of the Commission and must be made by written petition delivered to the zoning administrator. The appeal shall be on the application exactly as presented to the commission.

Signature of Applicant — Date: 10/7/2024

Signature of Owner — Date: 10/9/24

(If different from applicant, consenting to work to be performed on said property.)

CERTIFICATE OF APPROPRIATENESS

APPROVAL SIGNATURES

Preserving the Past for the Future

Historic Preservation Commission

Darryl Simmons (Application Deemed Complete)
Planning & Zoning Administrator

Date: 10-17-24

(Application Administratively Approved)
HPC Chair

Date: 10/17/2024

✓ GRANTED
DENIED Reason for denial _____
REQUIRES HPC APPROVAL

Historic Preservation Commission consideration:

HEARING DATE: _____

ACTION BY COMMISSION:

GRANTED

DENIED

APPROVED WITH CONDITIONS:

_____

_____

DENIED: Reason for denial

_____

_____

(May re-submit within 60 days)

POSTPONED/TABLED _____

_____

Signature, Historic Preservation Commission Date

Upon Administrative Approval scan and send document to Commission for review

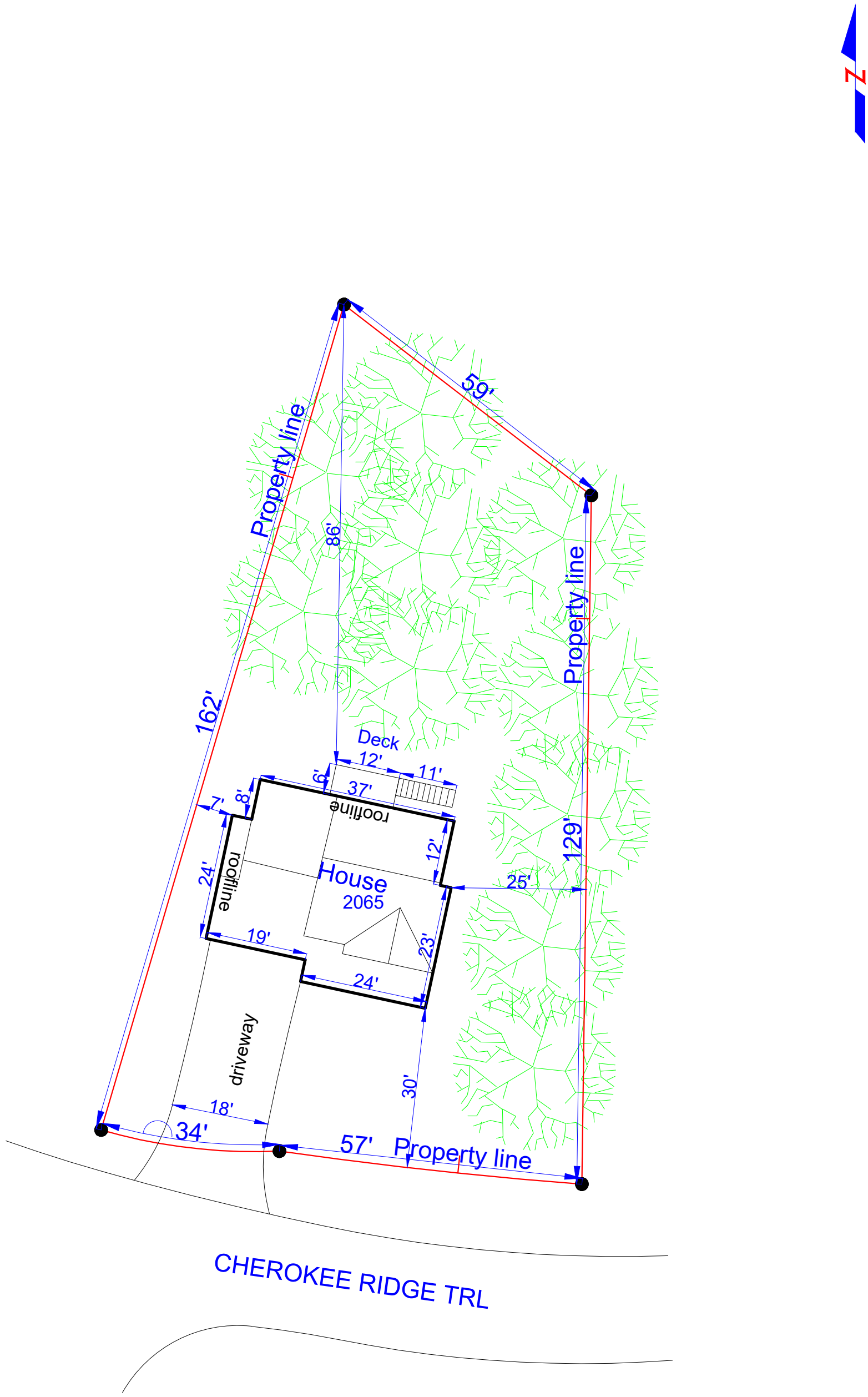

Parcel No. (APN)	20013802450
Land Use	RESIDENTIAL SINGLE FAMILY RESIDENCE
Lot Area	10,324 SF (0.24 ACRES)

ADDRESS: 2065 CHEROKEE RIDGE TRL
NW KENNESAW, GA 30144
Scale:1"=20'

THIS IS NOT A LEGAL SURVEY, NOR IS IT INTENDED TO BE OR REPLACE ONE

This work product represents only generalized locations of features, objects or boundaries and should not be relied upon as being legally authoritative for the precise location of any feature, object or boundary.

0' 10' 20' 40'
Graphic Scale

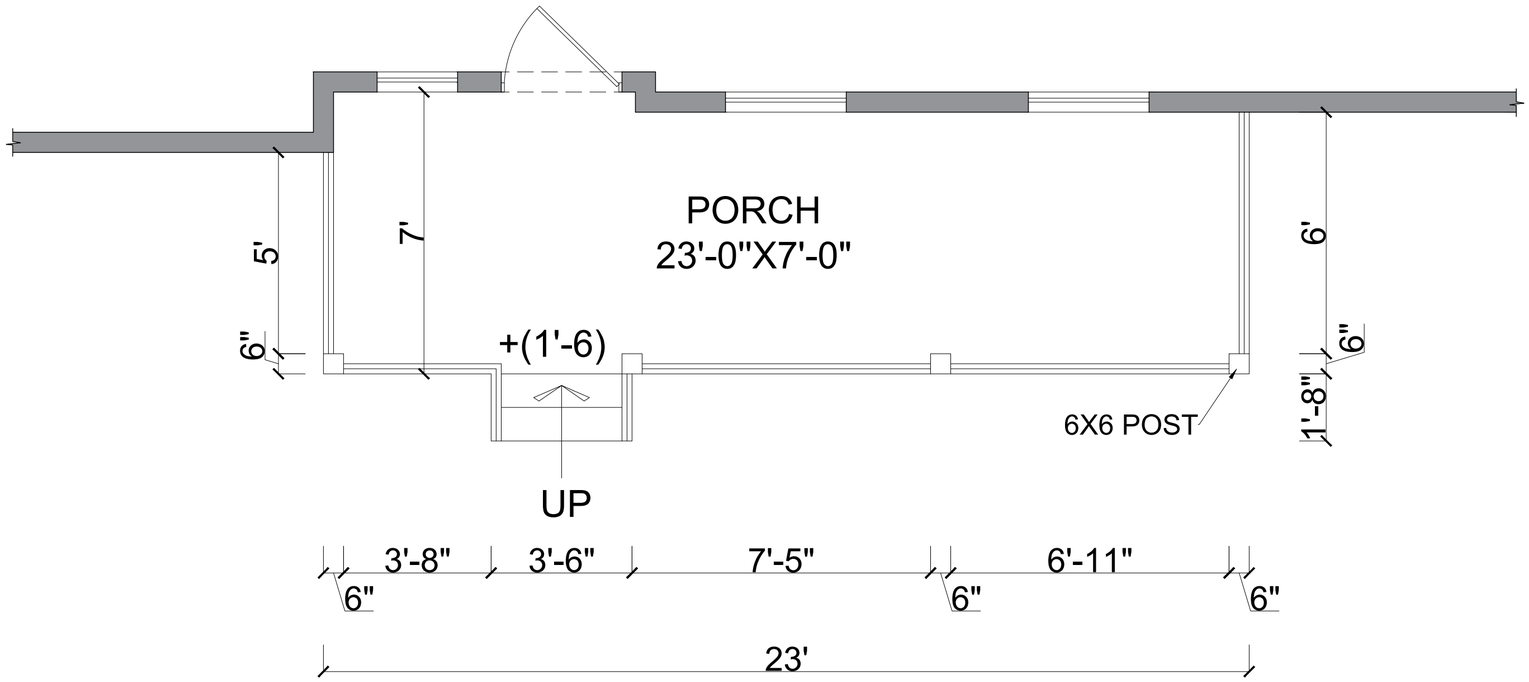

EXISTING & PROPOSED FRONT PORCH PLAN

SCALE : 3/8"=1'-0"

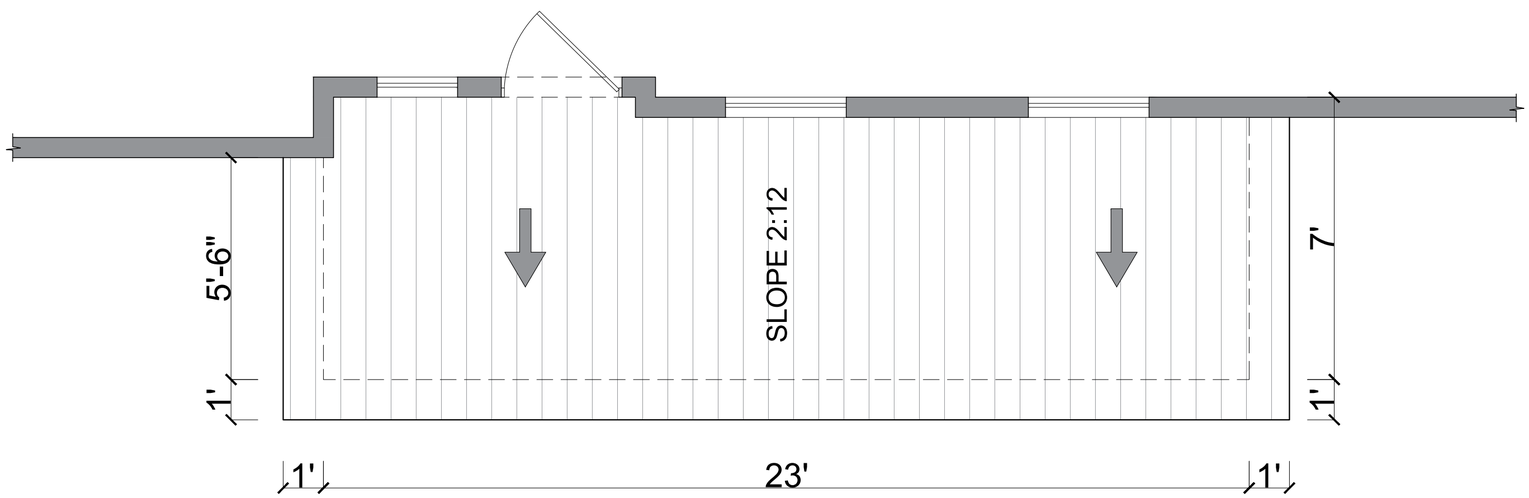

EXISTING & PROPOSED FRONT PORCH ROOF PLAN

SCALE : 3/8"=1'-0"

Team_Archh

PROJECT NAME -

ADDRESS

PREPARED BY-

SHEET TITTLE -

FLOOR PLAN & ROOF PLAN

Date:	30/09/2024
Project No:	PN-39-TA
Client Name:	
Drawn By:	TEAMARCHH
Checked By:	###
Approved By:	###
Scale:	AS SHOWN
Sheet No:	A 01
Paper Size:	ARCHC (18"X24")

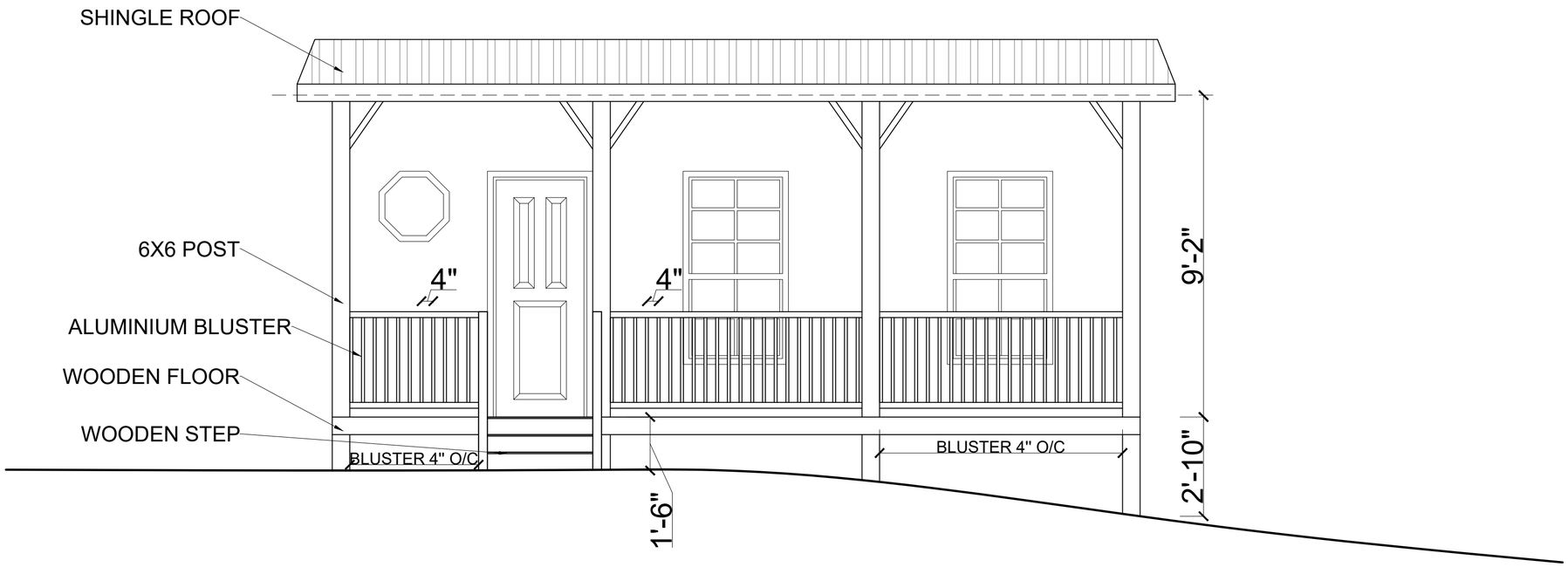

FRONT ELEVATION

SCALE : 3/8"=1'-0"

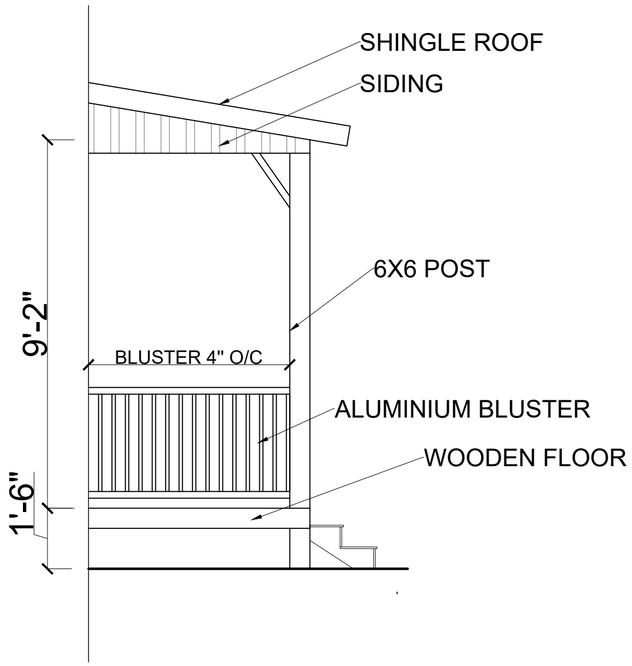

LEFT ELEVATION

SCALE : 3/8"=1'-0"

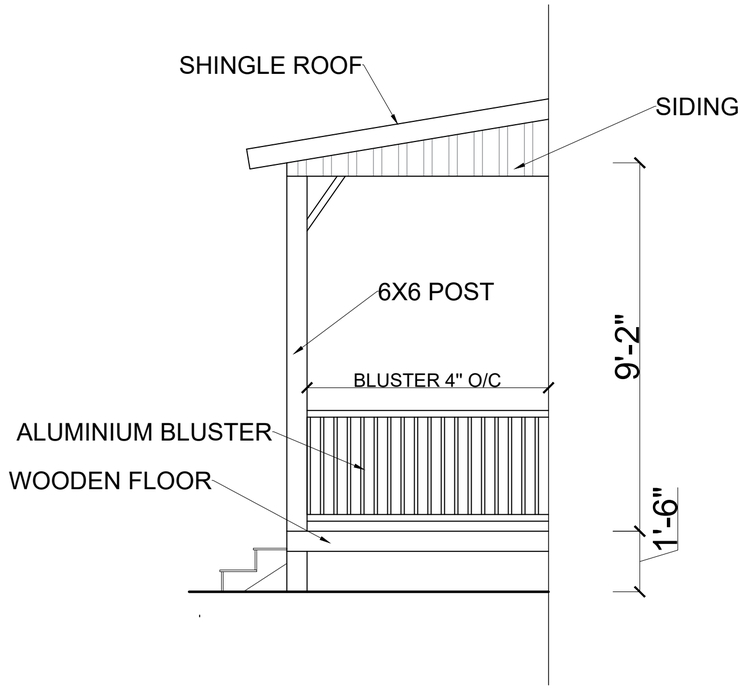

RIGHT ELEVATION

SCALE : 3/8"=1'-0"

Team_Archh

PROJECT NAME -

ADDRESS

PREPARED BY-

SHEET TITTLE -

ELEVATION

Date:	30/09/2024
Project No:	PN-39-TA
Client Name:	
Drawn By:	TEAMARCHH
Checked By:	###
Approved By:	###
Scale:	AS SHOWN
Sheet No:	A 02
Paper Size:	ARCHC (18"X24")

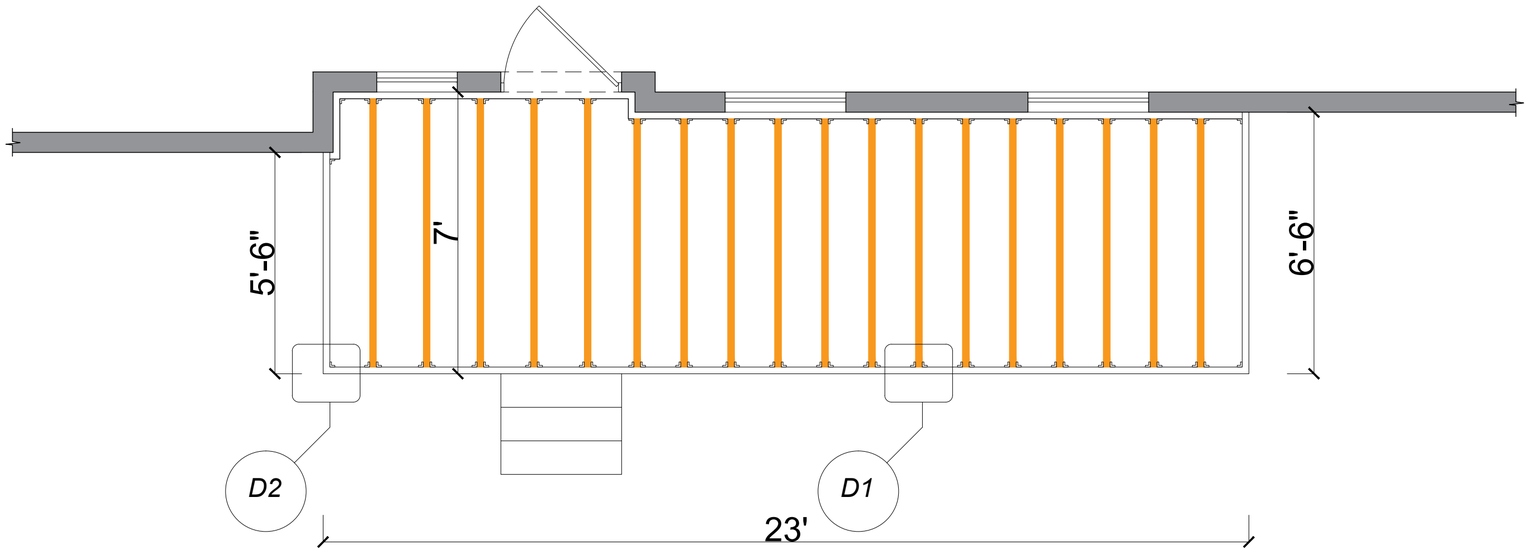

FRONT PORCH FLOOR FRAMING PLAN

SCALE : 3/8"=1'-0"

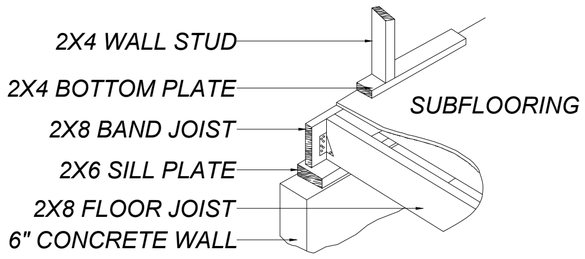

D1 **FLOOR FRAMING AT EXTERIOR WALL**

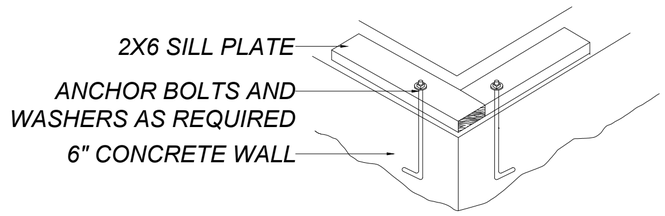

D2 **ANCHORAGE OF SILL TO FOUNDATION WALL**

Team_Archh

PROJECT NAME -

ADDRESS

PREPARED BY-

SHEET TITTLE -

FLOOR FRAMING PLAN

Date:	30/09/2024
Project No:	PN-39-TA
Client Name:	
Drawn By:	TEAMARCHH
Checked By:	###
Approved By:	###
Scale:	AS SHOWN
Sheet No:	S 01
Paper Size:	ARCHC (18"X24")

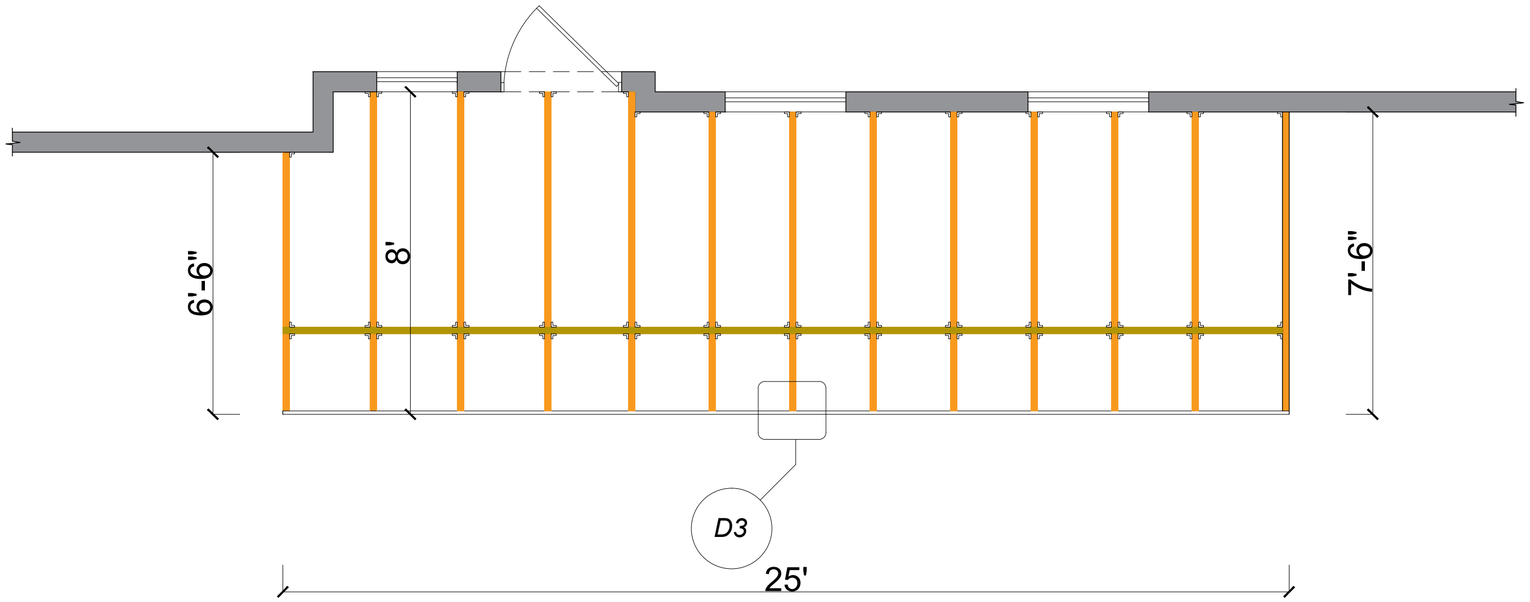

FRONT PORCH ROOF FRAMING PLAN

SCALE : 3/8"=1'-0"

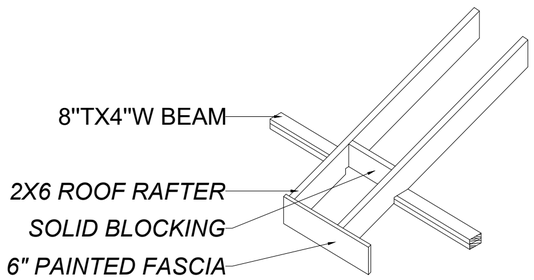

D3 **ROOF FRAMING AT EAVE**

Team_Archh

PROJECT NAME -

ADDRESS

PREPARED BY-

SHEET TITTLE -

ROOF FRAMING PLAN

Date:	30/09/2024
Project No:	PN-39-TA
Client Name:	
Drawn By:	TEAMARCHH
Checked By:	###
Approved By:	###
Scale:	AS SHOWN
Sheet No:	S 02
Paper Size:	ARCHC (18"X24")

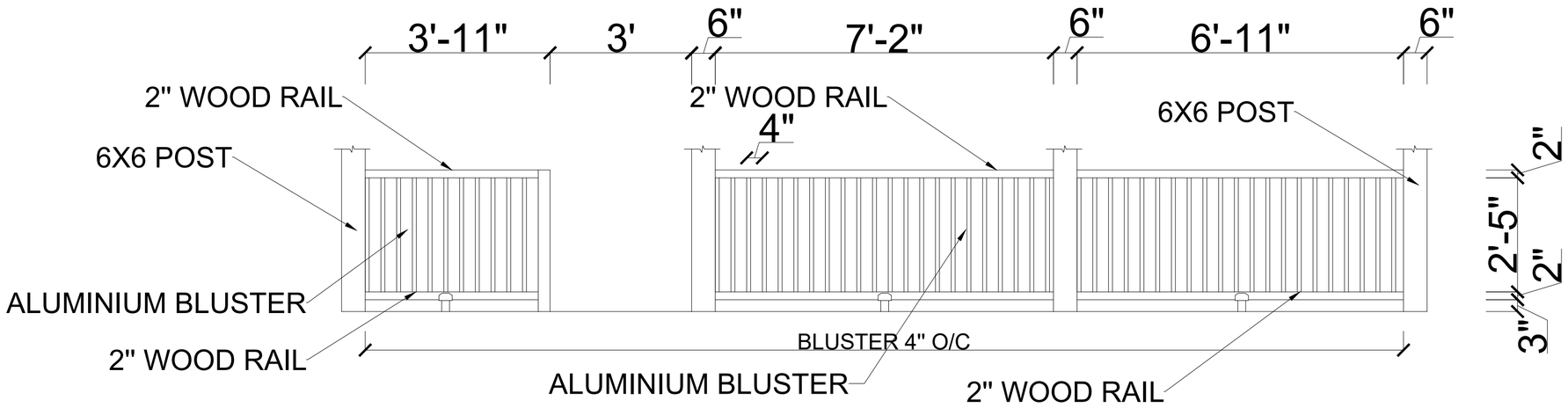

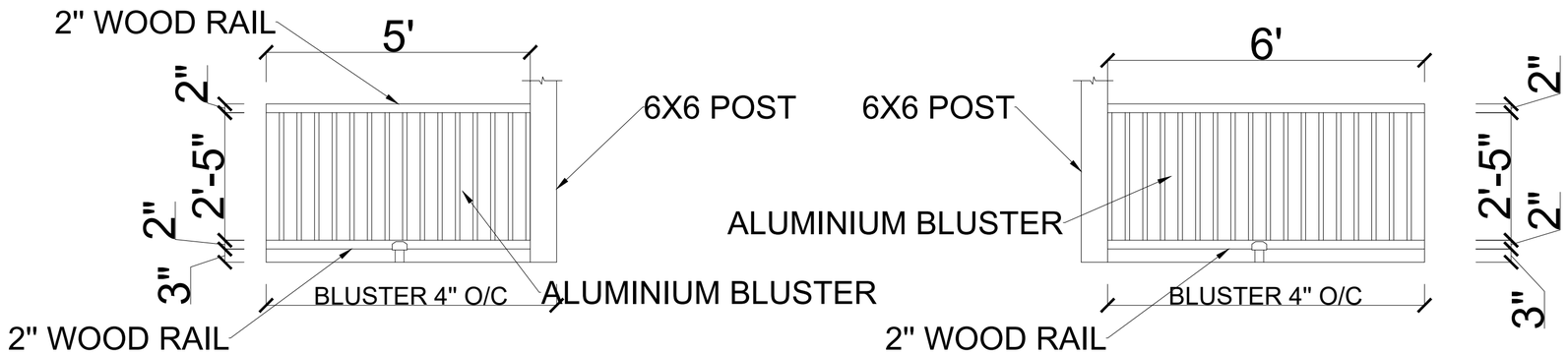

RAILING DETAIL

SCALE : 1/2"=1'-0"

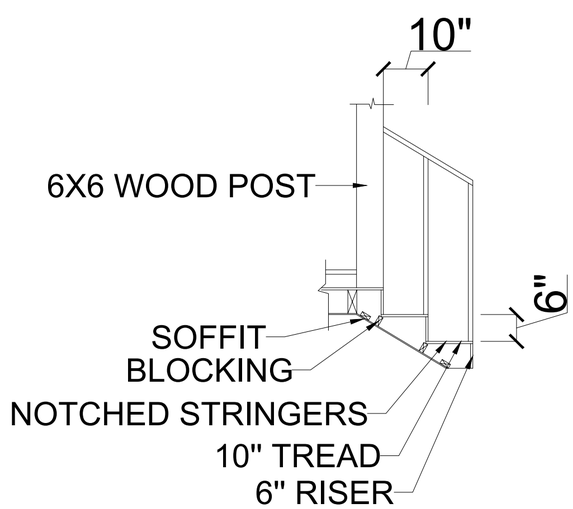

STAIR DETAIL

SCALE : 1/2"=1'-0"

Team_Archh

PROJECT NAME -

ADDRESS

PREPARED BY-

SHEET TITTLE -

RAILING & STAIR DETAIL

Date:	30/09/2024
Project No:	PN-39-TA
Client Name:	
Drawn By:	TEAMARCHH
Checked By:	###
Approved By:	###
Scale:	AS SHOWN
Sheet No:	S 04
Paper Size:	ARCHC (18"X24")

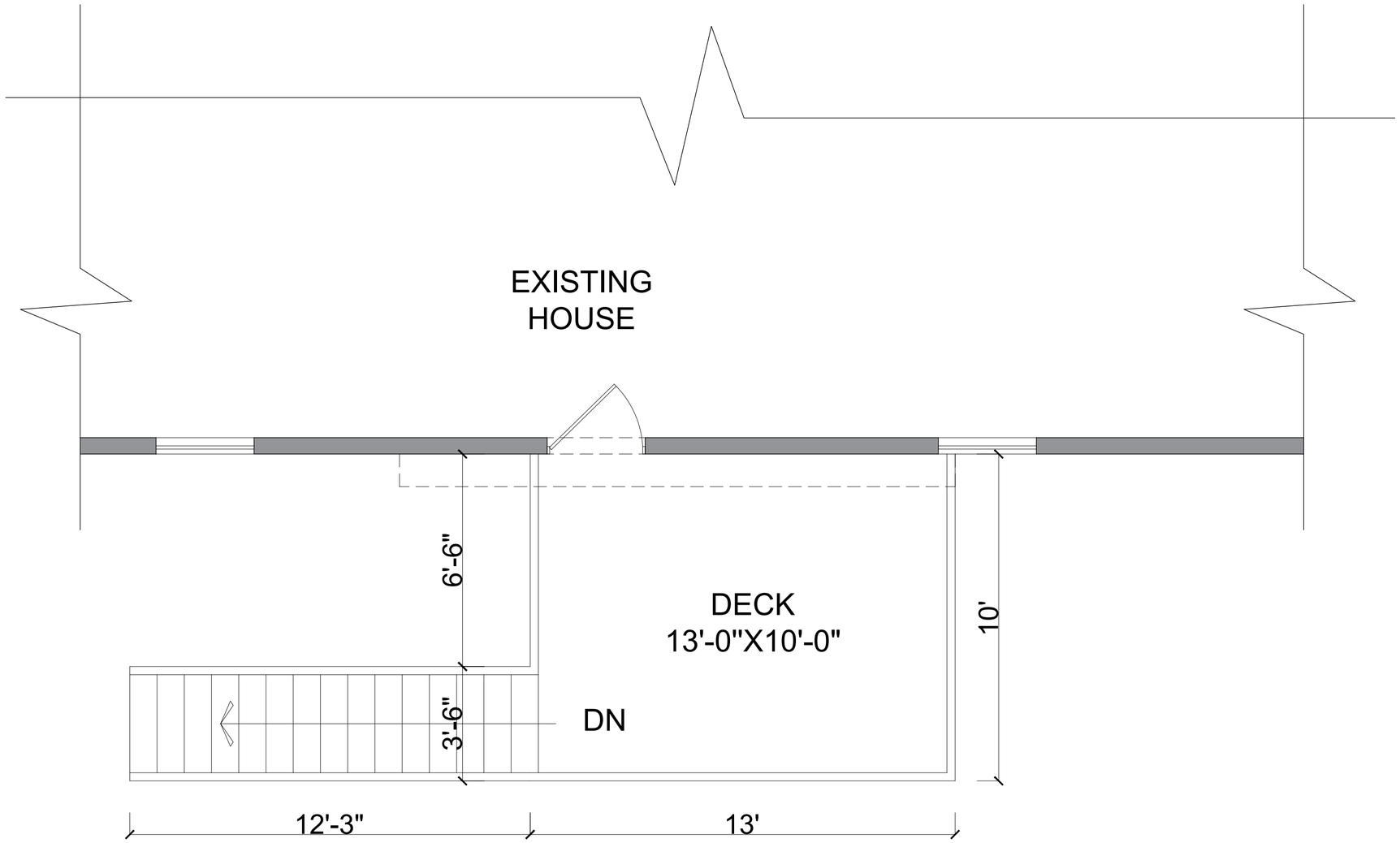

EXISTING REAR DECK PLAN

SCALE : 3/8"=1'-0"

Team_Archh

PROJECT NAME -

ADDRESS

PREPARED BY-

SHEET TITTLE -

EXISTING PLAN

Date:	30/09/2024
Project No:	PN-39-TA
Client Name:	
Drawn By:	TEAMARCHH
Checked By:	###
Approved By:	###
Scale:	AS SHOWN
Sheet No:	A 03
Paper Size:	ARCHC (18"X24")

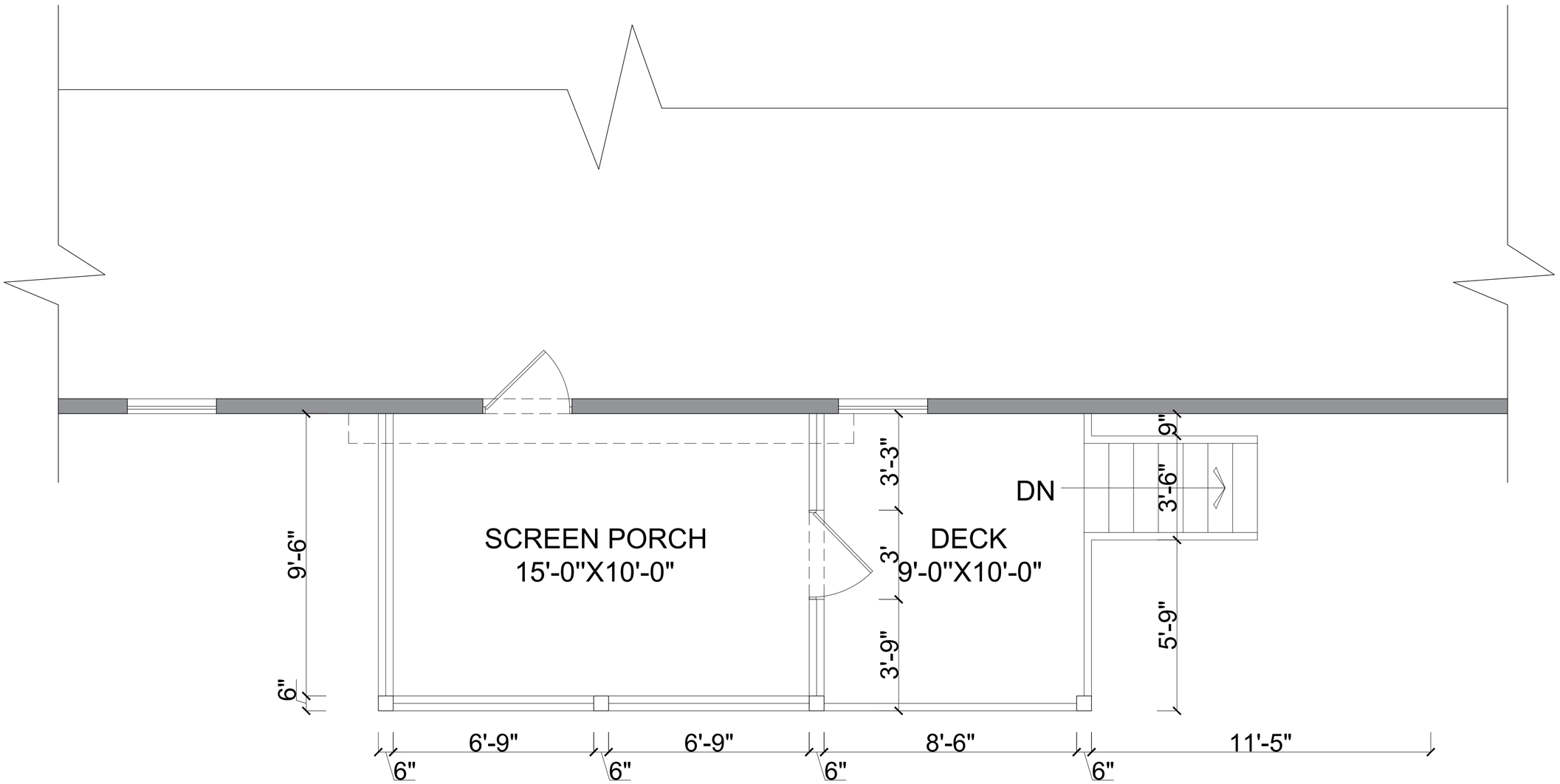

PROPOSED REAR DECK PLAN

SCALE : 3/8"=1'-0"

Team_Archh

PROJECT NAME -

ADDRESS

PREPARED BY-

SHEET TITTLE -

PROPOSED PLAN

Date:	30/09/2024
Project No:	PN-39-TA
Client Name:	
Drawn By:	TEAMARCHH
Checked By:	###
Approved By:	###
Scale:	AS SHOWN
Sheet No:	A 04
Paper Size:	ARCHC (18"X24")

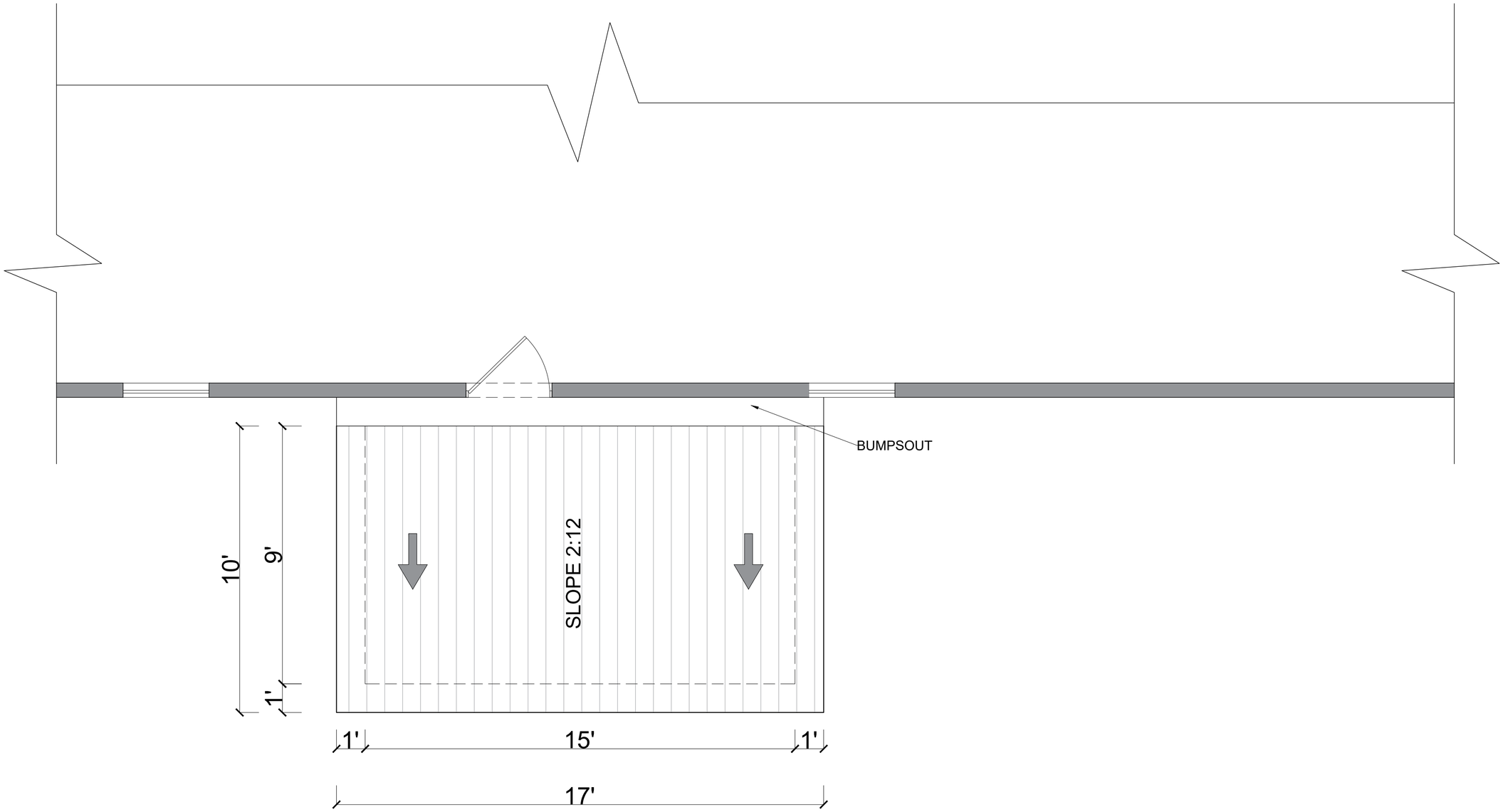

PROPOSED REAR DECK ROOF PLAN

SCALE : 3/8"=1'-0"

Team_Archh

PROJECT NAME -

ADDRESS

PREPARED BY-

SHEET TITTLE -

ROOF PLAN

Date:	30/09/2024
Project No:	PN-39-TA
Client Name:	
Drawn By:	TEAMARCHH
Checked By:	###
Approved By:	###
Scale:	AS SHOWN
Sheet No:	A 05
Paper Size:	ARCHC (18"X24")

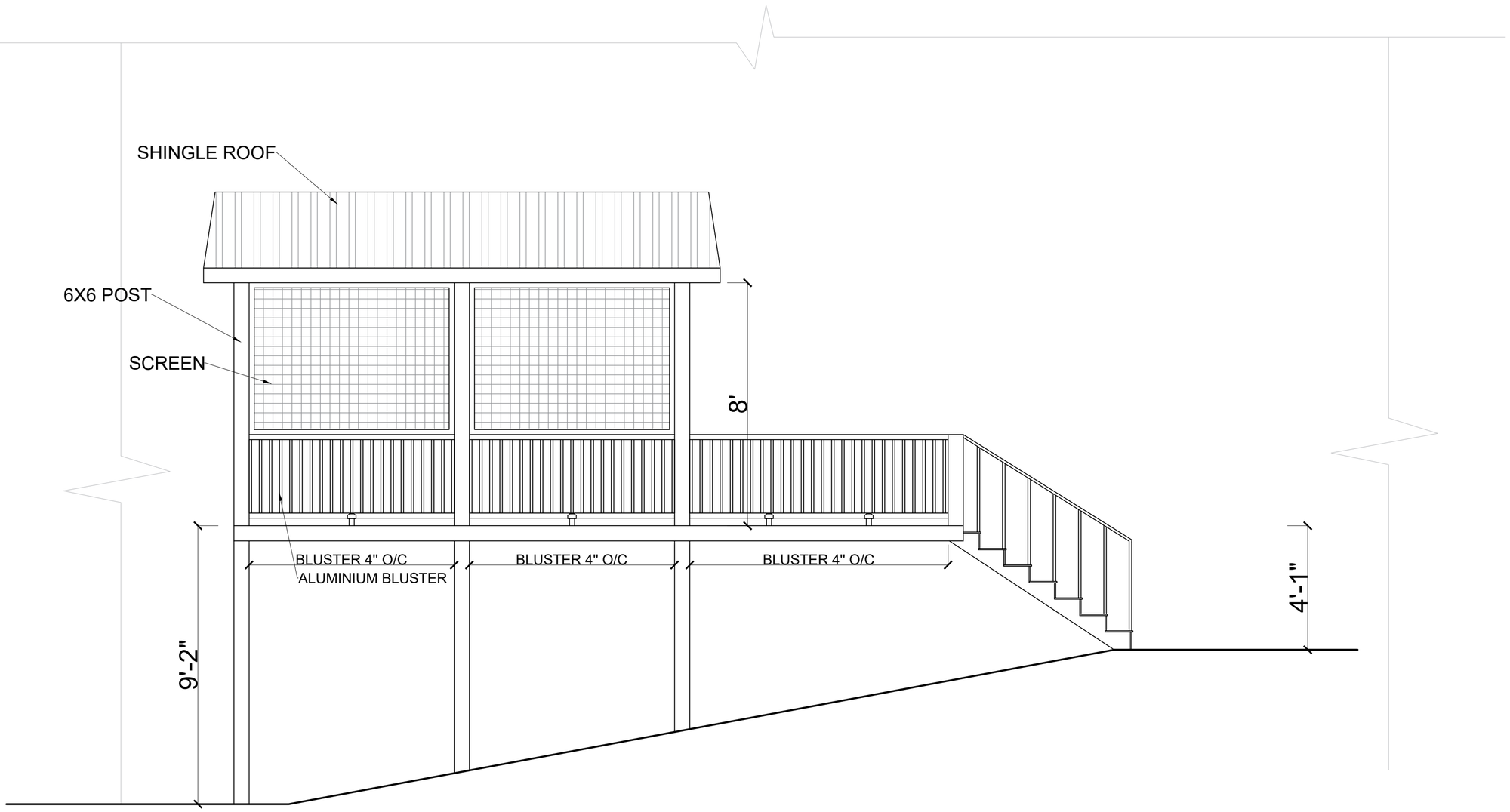

FRONT ELEVATION

SCALE : 3/8"=1'-0"

Team_Archh

PROJECT NAME -

ADDRESS

PREPARED BY-

SHEET TITTLE -

ELEVATION

Date:	30/09/2024
Project No:	PN-39-TA
Client Name:	
Drawn By:	TEAMARCHH
Checked By:	###
Approved By:	###
Scale:	AS SHOWN
Sheet No:	A 06
Paper Size:	ARCHC (18"X24")

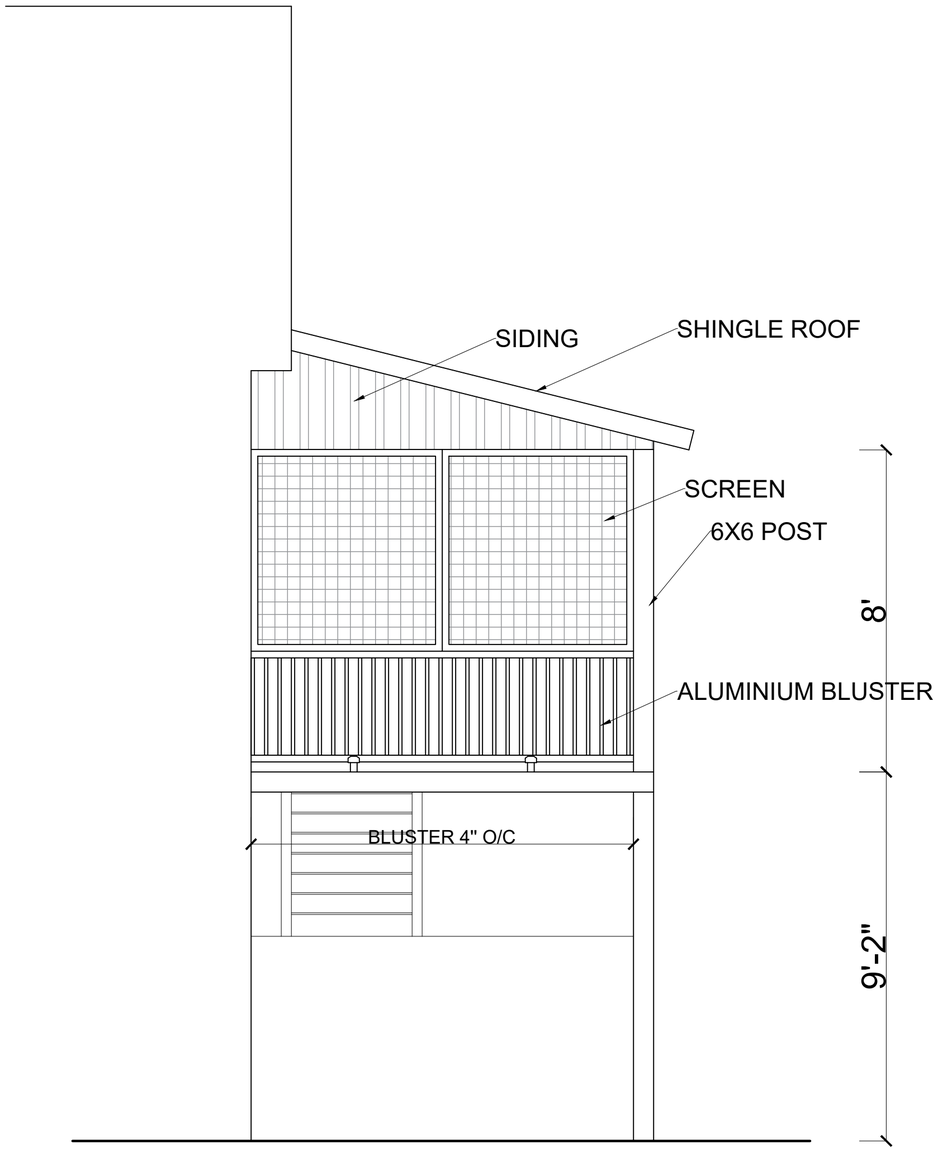

LEFT ELEVATION

SCALE : 3/8"=1'-0"

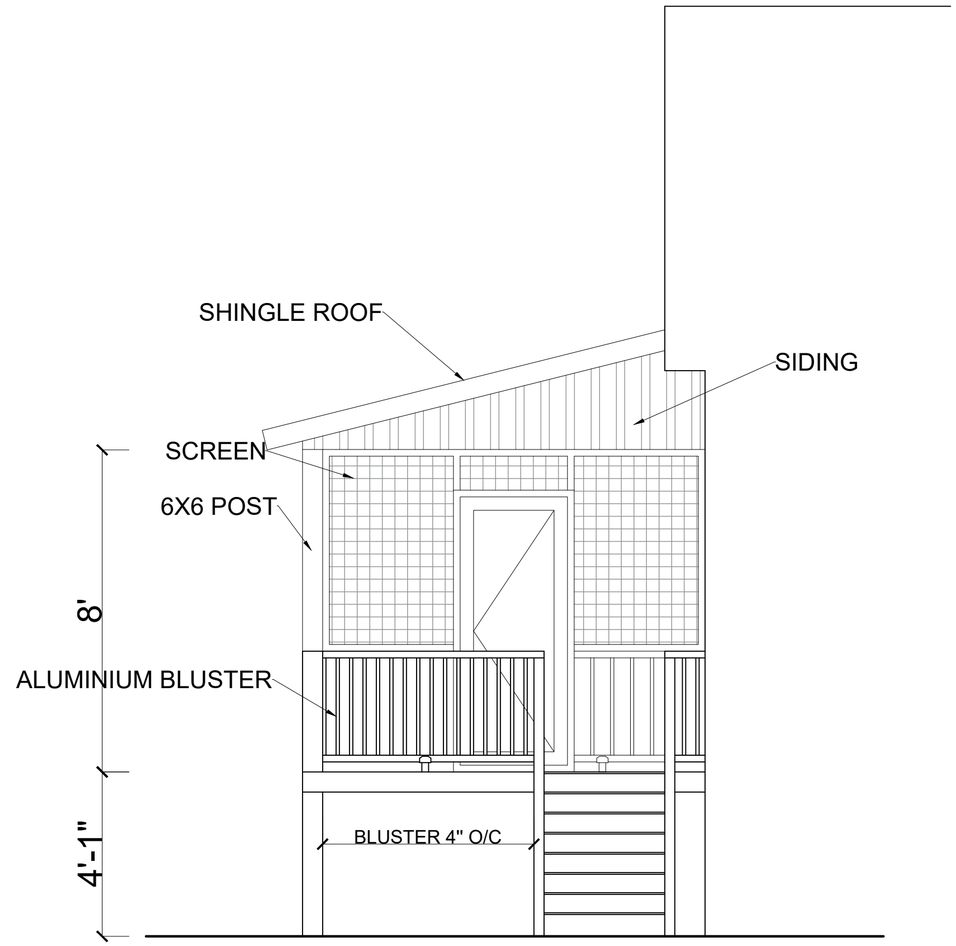

RIGHT ELEVATION

SCALE : 3/8"=1'-0"

Team_Archh

PROJECT NAME -

ADDRESS

PREPARED BY-

SHEET TITTLE -

ELEVATION

Date:	30/09/2024
Project No:	PN-39-TA
Client Name:	
Drawn By:	TEAMARCHH
Checked By:	###
Approved By:	###
Scale:	AS SHOWN
Sheet No:	A 07
Paper Size:	ARCHC (18"X24")

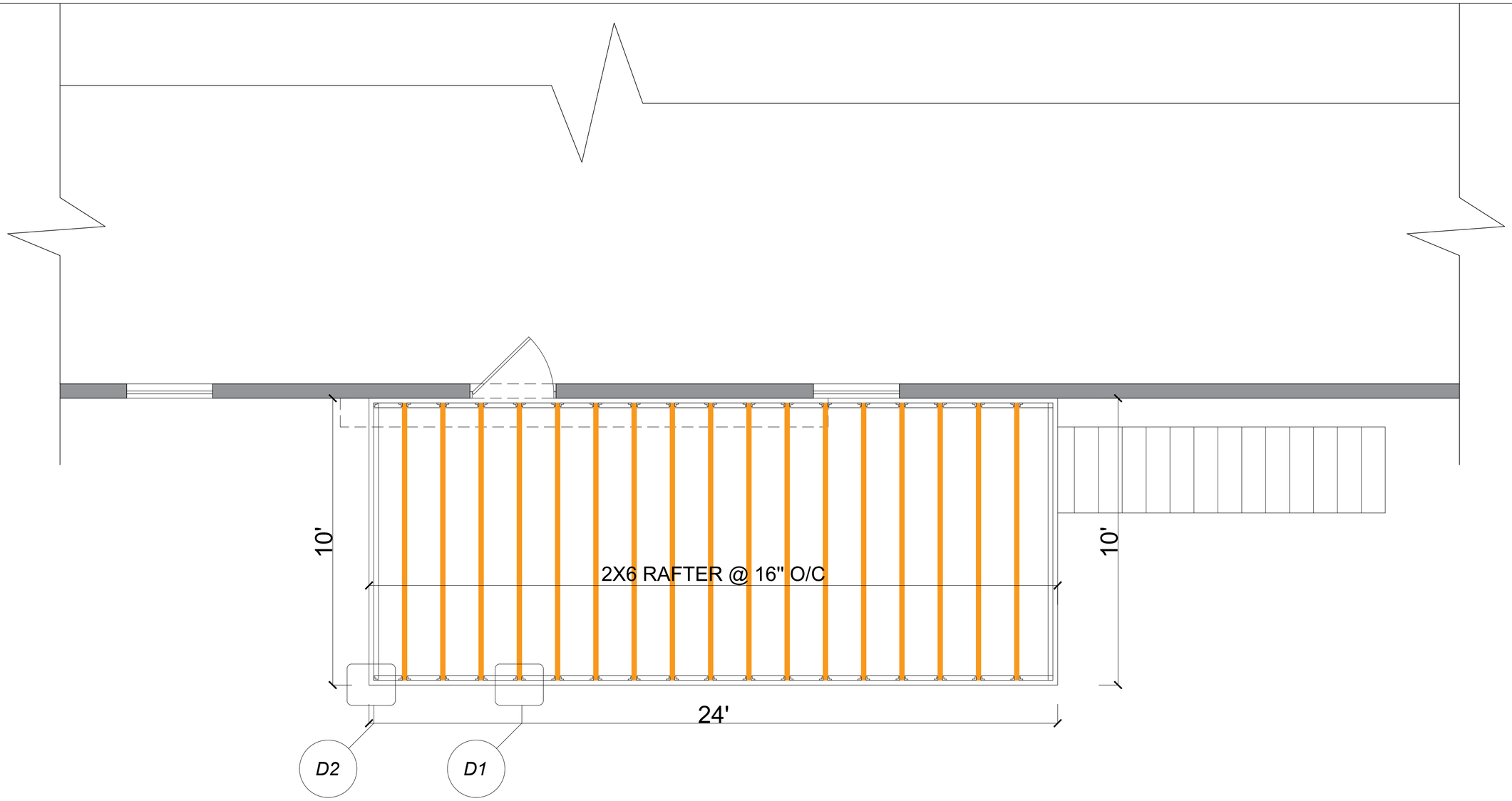

PROPOSED REAR DECK FLOOR FRAMING PLAN

SCALE : 3/8"=1'-0"

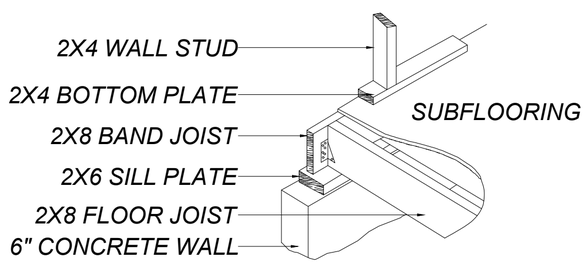

D1 **FLOOR FRAMING AT EXTERIOR WALL**

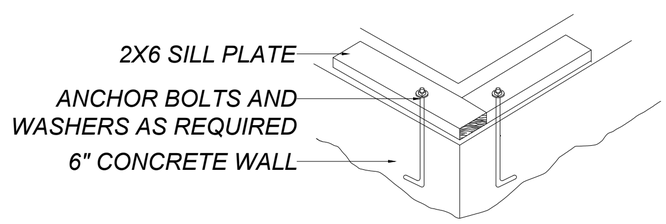

D2 **ANCHORAGE OF SILL TO FOUNDATION WALL**

Team_Archh

PROJECT NAME -

ADDRESS

PREPARED BY-

SHEET TITTLE -

FRAMING PLAN

Date:	30/09/2024
Project No:	PN-39-TA
Client Name:	
Drawn By:	TEAMARCHH
Checked By:	###
Approved By:	###
Scale:	AS SHOWN
Sheet No:	S 05
Paper Size:	ARCHC (18"X24")

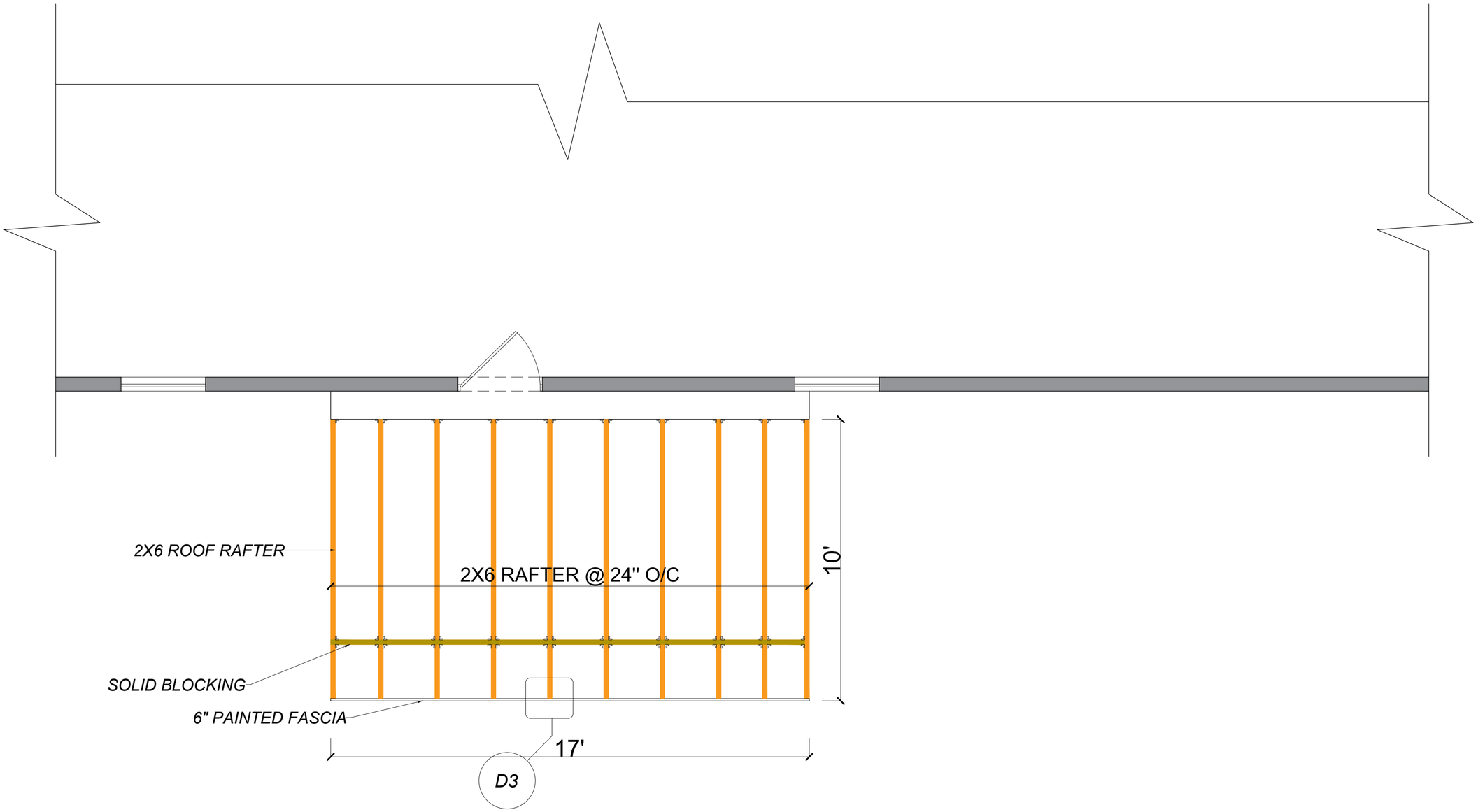

PROPOSED REAR DECK ROOF FRAMING PLAN

SCALE : 3/8"=1'-0"

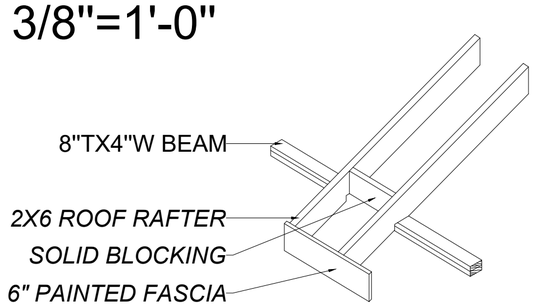

D3 **ROOF FRAMING AT EAVE**

Team_Archh

PROJECT NAME -

ADDRESS

PREPARED BY-

SHEET TITTLE -

ROOF FRAMING PLAN

Date:	30/09/2024
Project No:	PN-39-TA
Client Name:	
Drawn By:	TEAMARCHH
Checked By:	###
Approved By:	###
Scale:	AS SHOWN
Sheet No:	S 06
Paper Size:	ARCHC (18"X24")

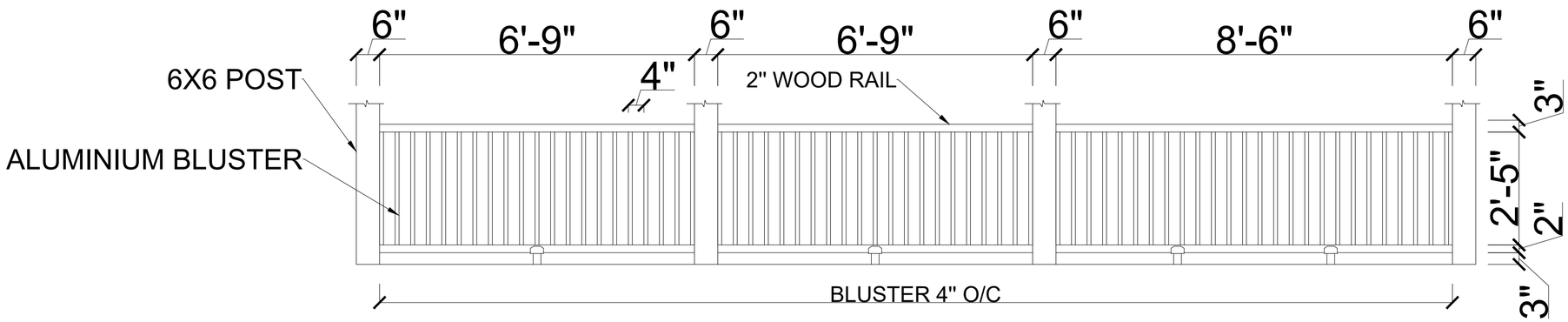

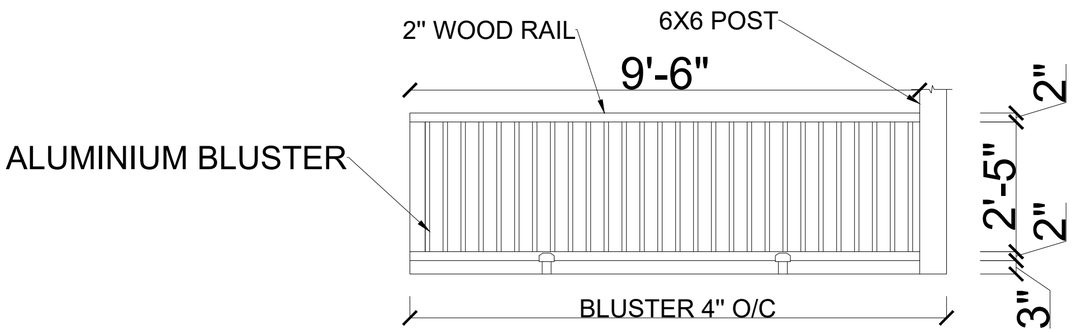

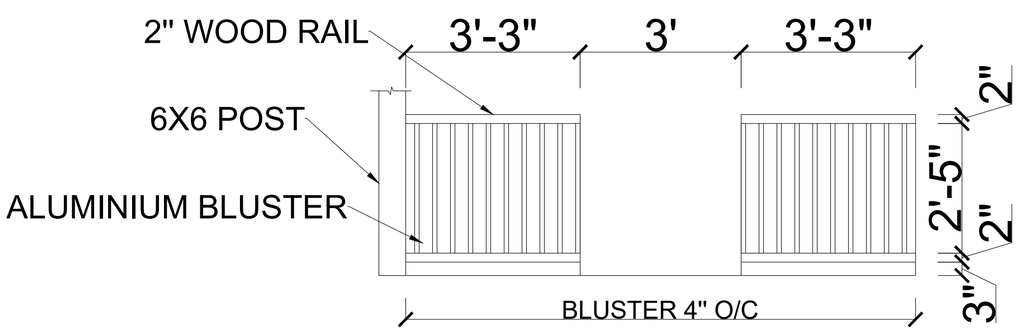

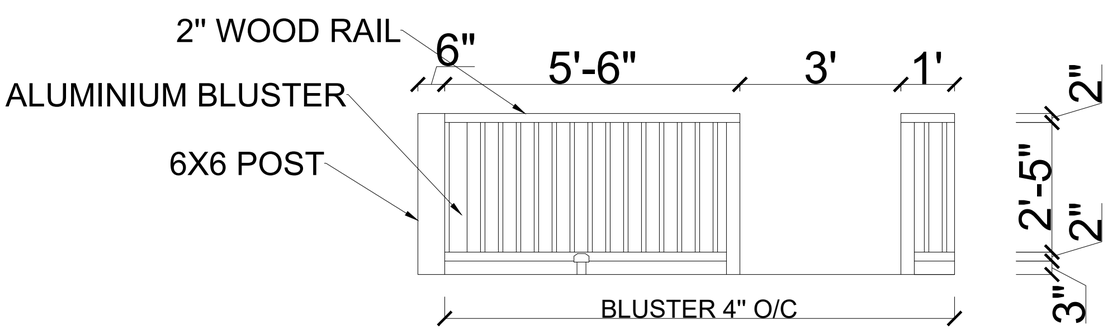

RAILING DETAIL

SCALE : 1/2"=1'-0"

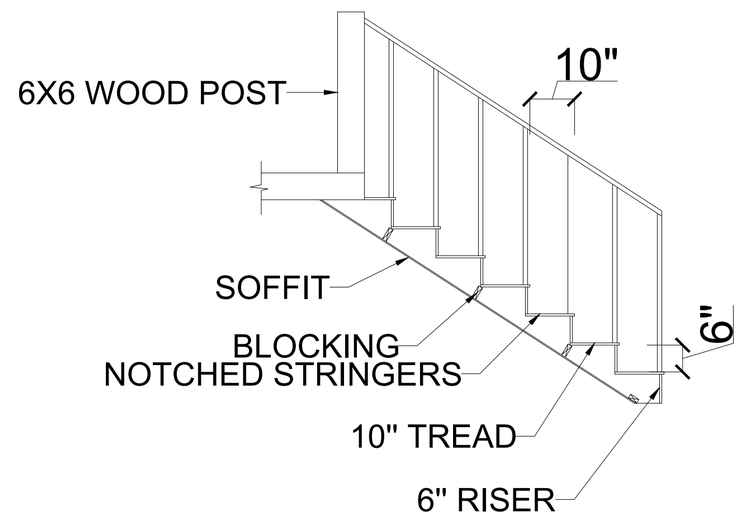

STAIR DETAIL

SCALE : 1/2"=1'-0"

Team_Archh

PROJECT NAME -

ADDRESS

PREPARED BY-

SHEET TITTLE -

RAILING & STAIR DETAIL

Date:	30/09/2024
Project No:	PN-39-TA
Client Name:	
Drawn By:	TEAMARCHH
Checked By:	###
Approved By:	###
Scale:	AS SHOWN
Sheet No:	S 07
Paper Size:	ARCHC (18"X24")

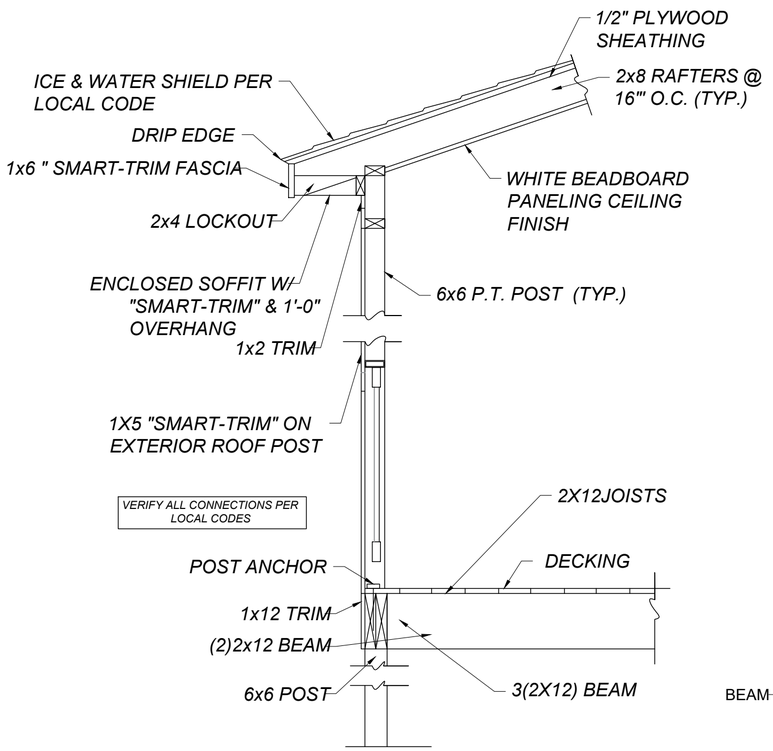

PORCH DETAIL
SCALE: NTS

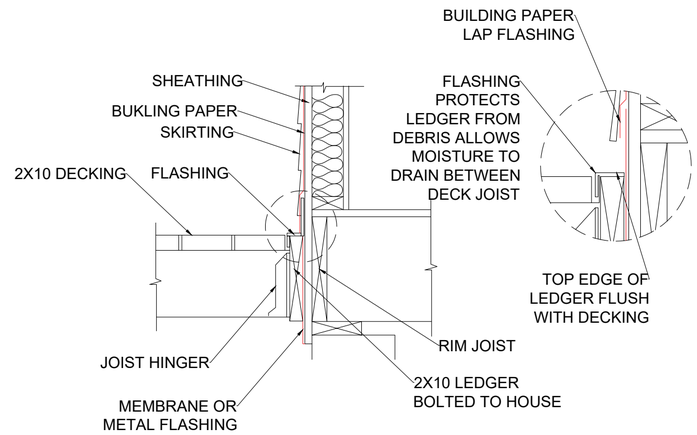

FLASHING & LEDGER DETAIL

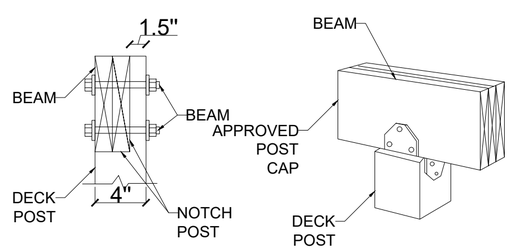

POST TO BEAM CONECTION

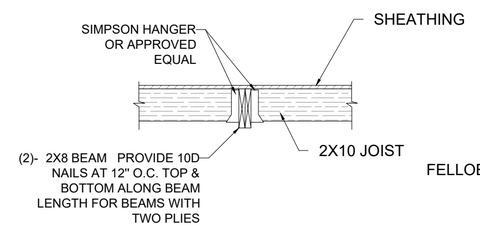

JOIST TO BEAM CONECTION

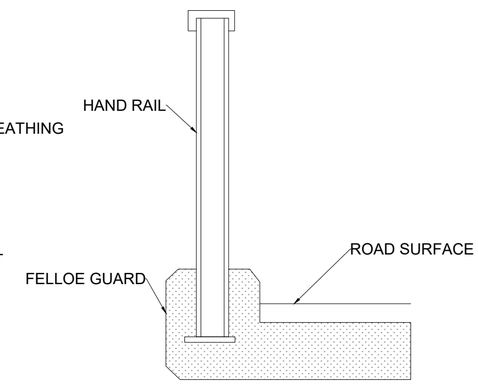

GUARD DETAIL

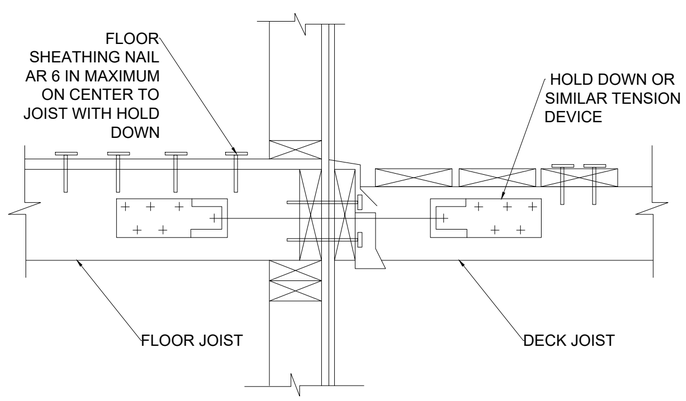

DECK ATTACHMENT FOR LATERAL LOADS

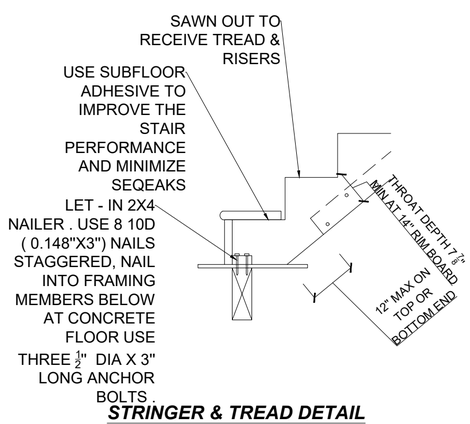

STRINGER & TREAD DETAIL

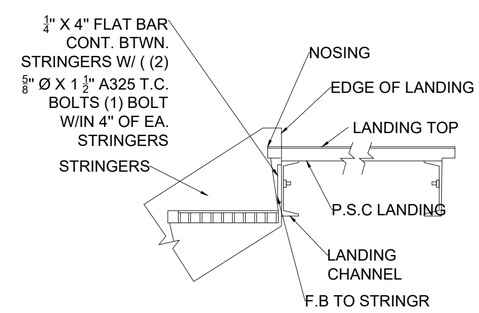

LANDING DETAIL

Team_Archh

PROJECT NAME -

ADDRESS

PREPARED BY-

SHEET TITTLE -

DETAILs

Date:	30/09/2024
Project No:	PN-39-TA
Client Name:	
Drawn By:	TEAMARCHH
Checked By:	###
Approved By:	###
Scale:	AS SHOWN
Sheet No:	S 08
Paper Size:	ARCHC (18"X24")

Certificate of Appropriateness

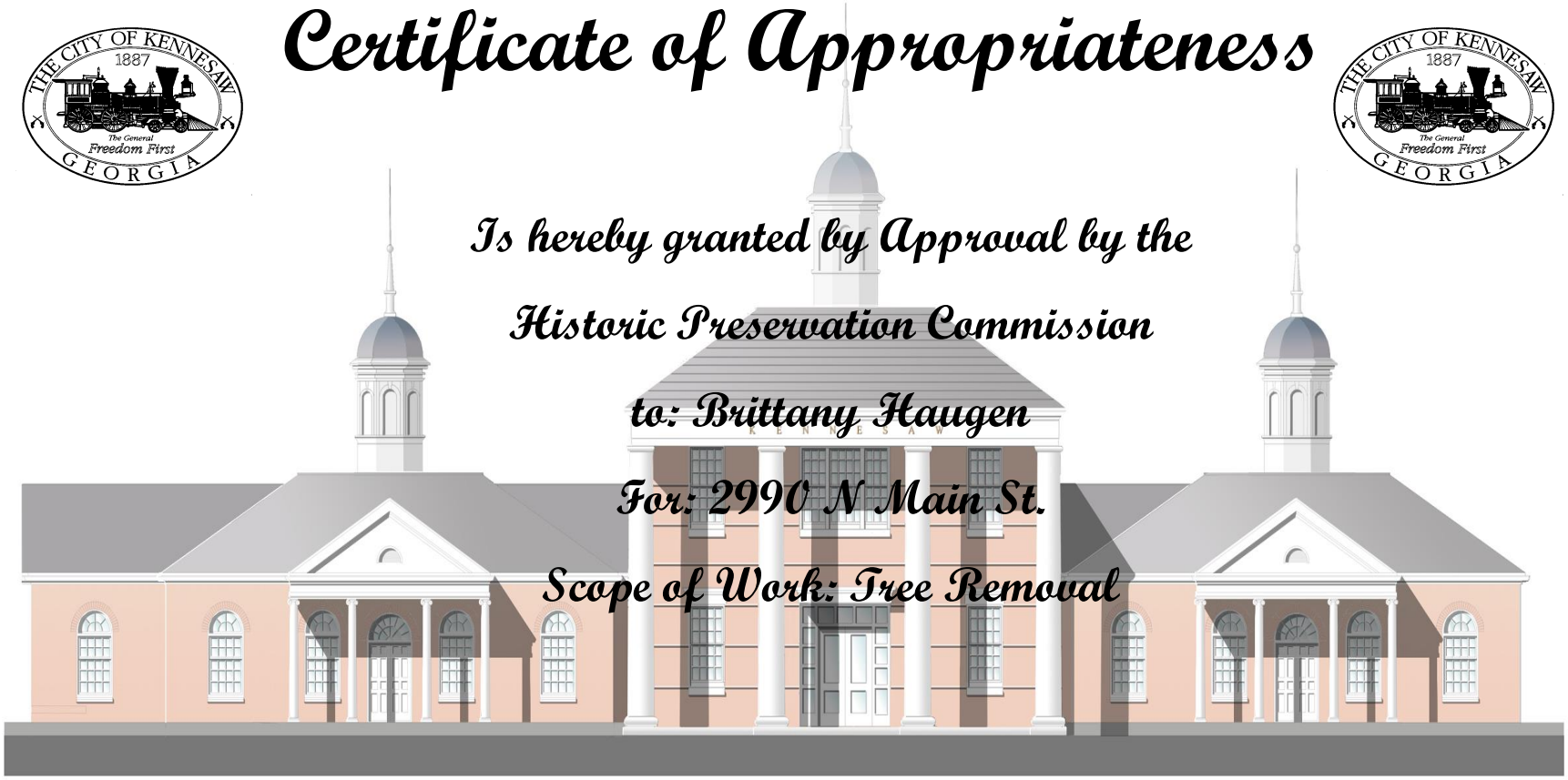

Is hereby granted by Approval by the

Historic Preservation Commission

to: Brittany Haugen

For: 2990 N Main St.

Scope of Work: Tree Removal

Darryl Simmons

Darryl Simmons, Administrator
Planning & Zoning Department

10/24/2024

Date

Kevin Whipple

Kevin Whipple, Chairperson
Historic Preservation Commission

10/24/2024

Date

Expires
10/24/2025

CERTIFICATE OF APPROPRIATENESS APPLICATION

☒ Application Fee: $50.00 ☐ Demolition Fee: $150.00

All new construction and exterior remodeling of buildings within the Kennesaw Historic District shall be subject to the architectural review and approval of the Historic Preservation Commission (**HPC**). HPC approval is also required for Kennesaw Downtown Development Authority (KDDA) Façade and Signage Grants.

Darryl Simmons, Planning and Zoning Administrator for the City of Kennesaw will meet with you to direct your application process. To make an appointment, please call 770-590-8268.

A Certificate of Appropriateness (COA) shall be obtained from the **HPC** prior to the issuance of a building permit. The **HPC** shall consider a variety of issues in rendering its decision including, but not limited to the following:

a. The surrounding development
b. The best interest of the community
c. Previous studies undertaken by the City as well as the standards contained herein.

Application for signage to include

☐ Material Specifications
☐ Drawing of Sign with Dimensions and Colors to be used
☐ Façade detail of fonts

Application for landscaping to include

☐ Variety of trees and shrubs
☐ Indicate size and location of plantings

Application for exterior renovations and additions to include

☐ Existing conditions site plan depicting location of addition in relation to the existing property
☐ Existing floor plan of building
☐ Proposed floor plan of building including portions not to be altered
☐ Elevations of all exterior façade of addition including relationship to existing building
☐ Detail of trim to be utilized on façade
☐ Manufacturer's specifications for windows, doors and lighting that will be installed-including a photograph or sketch
☐ Photographs of all existing facades; existing structures adjacent to property; and views from the façade to be altered

CONSISTENT WITH THE UNITED STATES CONSTITUTION AND THE RELIGIOUS LAND USE AND INSTITUTIONALIZED PERSONS ACT OF 2000, THE CITY OF KENNESAW DOES NOT DISCRIMINATE ON THE BASIS OF RELIGION IN THE APPLICATION OF ITS LAWS, POLICIES, OR PROCEDURES, INCLUDING THE APPLICATION OF ITS LAND USE REGULATIONS AND ZONING LAWS.

Under the Religious Land Use and Institutionalized Persons Act of 2000 ("RLUIPA"), no government, including the City of Kennesaw, may apply its zoning or land use laws in a manner that imposes a substantial burden on the religious exercise of a person, including a religious assembly or institution. RLUIPA also provides that no government, including the City of Kennesaw, may apply a land use regulation in a manner that treats a religious assembly or institution (a church, for example) on less than equal terms than a nonreligious institution or assembly (a day care center or movie theater, for example). Finally, RLUIPA provides that no government, including the City of Kennesaw, may impose or implement a land use regulation in a manner that discriminates against a religious assembly or institution.

If you believe that the City of Kennesaw, or any other local government or municipality, has discriminated against you in the implementation of its zoning or land use laws, please contact the United States Department of Justice.

United States Department of Justice
Civil Rights Division
Housing and Civil Enforcement Section
950 Pennsylvania Ave. N.W. –G St.
Washington, DC 20530

1. **NAME OF APPLICANT:** Brittany + John Haugen
   - ☒ Owner
   - ☐ Other
   - ☐ Other, please specify _____

APPLICANT MAILING ADDRESS: 2990 N Main St. NW
Kennesaw, GA 30144

(Home#)_____ (Cell#[redacted] (Email) [redacted]

PROPERTY ADDRESS: 2990 N Main St. NW

Land Lot _____ Tax Parcel _____ Lot Size _____

Current zoning on property: _____

2. **NAME OF ATTORNEY OR REPRESENTATIVE:**

_____

(Home#)_____ (Cell#) _____ (Email) _____

NAME OF OWNER:
Brittany + John Haugen

(Home#)_____ (Cell#)[redacted] (Email) [redacted]

3. **ACTIVITY**

- ☐ New Construction
- ☐ Demolition
- ☐ Awnings
- ☐ Fence
- ☐ Repairs or Alterations
- ☒ Landscaping
- ☐ Exterior Architectural Features
- ☐ Exterior Environmental Feature Change
- ☐ Moving a Building
- ☐ Sign Erection
- ☐ Sign Placement *

*** (NOTE – Business License required before signage installation)**

Please describe your proposed work as simply and accurately as possible. Use the attached submittal criteria checklist to guide you in your description. Be sure to indicate materials to be used. Accurate drawings and photographs are required. (Use extra sheet, if necessary.) **Signed and sealed drawings from an architect, engineer or other design professional are required when construction of a new building, alterations and/or additions to existing structures are being made (Code 800.14.1).**

Removal of 80'+ water oak tree in front yard. Arborist said it is in state of decay and hollow on inside. On 9/22 a very large branch fell into my neighbors yard. The rest could fall in street or on house.

Important: This form must be completed before the Historic Preservation Commission will consider the approval of any material change to a property within a Historic District. This form, along with supporting documents must be filed with 1 Original (4) copies including color photos (excluding models, material and color samples, where one (1) is sufficient). The application and supporting documents are to be placed on a **CD in a PDF format**.

Incomplete applications will not be docketed for consideration by the Historic Preservation Commission.

The City of Kennesaw will not issue any permits until 7 days after the Commission's decision, per City Ordinance No. 2003-51, Section Two. 800.20 –Any person or persons jointly or severally aggrieved by any decision of the Kennesaw HPC may appeal to the Mayor and City Council. The appeal must be filed within 7 days of the decision of the Commission and must be made by written petition delivered to the zoning administrator. The appeal shall be on the application exactly as presented to the commission.

Buttany Haugen 9-26-24

Signature of Applicant **Date**

Signature of Owner **Date**

(If different from applicant, consenting to work to be performed on said property.

CERTIFICATE OF APPROPRIATENESS

APPROVAL SIGNATURES

Darryl Simmons (Application Deemed Complete)
Planning & Zoning Administrator Date: 10-24-24

(Application Administratively Approved)
HPC Chair Date: 10/24/2024

- ☑ GRANTED
- ☐ DENIED Reason for denial _____
- ☐ REQUIRES HPC APPROVAL

Historic Preservation Commission consideration:

HEARING DATE:_____

ACTION BY COMMISSION:

☐ GRANTED

☐ DENIED

APPROVED WITH CONDITIONS:

_____

_____

DENIED: Reason for denial

_____

_____

(May re-submit within 60 days)

POSTPONED/TABLED_____

_____

Signature, Historic Preservation Commission Date

Upon Administrative Approval scan and send document to Commission for review

ISA Basic Tree Risk Assessment Form

Client Brittany Hauge Date 9/21/24 Time 10am
Address/Tree location 2990 N Main St., Kennesaw, GA 30144 Tree no. 1 Sheet 1 of 2
Tree species Water oak dbh 40" Height 80' Crown spread dia. 60'
Assessor(s) Adrian Caciur Time frame ____ Tools used Visual - Level 1 inspection

Target Assessment

Target number	Target description	Target zone: Target within drip line	Target within 1 x Ht.	Target within 1.5 x Ht.	Occupancy rate 1–rare 2–occasional 3–frequent 4–constant	Practical to move target?	Restriction practical?
1	Client's house	✔			4	No	
2	Client's driveway	✔			4	No	
3							
4							

Site Factors

History of failures Large codominant recently detached **Topography** Flat ■ Slope ☐ ____% **Aspect** ____
Site changes None ■ Grade change ☐ Site clearing ☐ Changed soil hydrology ☐ Root cuts ☐ Describe None
Soil conditions Limited volume ☐ Saturated ☐ Shallow ☐ Compacted ☐ Pavement over roots ■ 35 % Describe Front yard - normal
Prevailing wind direction ____ **Common weather** Strong winds ☐ Ice ☐ Snow ☐ Heavy rain ☐ Describe ____

Tree Health and Species Profile

Vigor Low ■ Normal ☐ High ☐ **Foliage** None (seasonal) ☐ None (dead) ☐ Normal 90 % Chlorotic ____% Necrotic ____%
Pests ____ **Abiotic** N/A
Species failure profile Branches ■ Trunk ■ Roots ☐ Describe ____

Load Factors

Wind exposure Protected ☐ Partial ■ Full ☐ Wind funneling ☐ ____ **Relative crown size** Small ☐ Medium ☐ Large ■
Crown density Sparse ☐ Normal ■ Dense ☐ **Interior branches** Few ☐ Normal ■ Dense ☐ **Vines/Mistletoe/Moss** ☐ None present
Recent or planned change in load factors ____

Tree Defects and Conditions Affecting the Likelihood of Failure

— Crown and Branches —

Unbalanced crown ■ LCR ____%
Dead twigs/branches ■ 15 % overall Max. dia. 6"
Broken/Hangers Number ____ Max. dia. ____
Over-extended branches ☐
Pruning history
Crown cleaned ☐ Thinned ☐ Raised ☐
Reduced ☐ Topped ☐ Lion-tailed ☐
Flush cuts ☐ Other ____

Cracks ☐ ____ Lightning damage ☐
Codominant ■ ____ Included bark ■
Weak attachments ■ Branch tips Cavity/Nest hole 40 % circ.
Previous branch failures ☐ ____ Similar branches present ☐
Dead/Missing bark ■ Cankers/Galls/Burls ☐ Sapwood damage/decay ☐
Conks ☐ Heartwood decay ■ ____
Response growth Minimal

Main concern(s) Major decay inside the trunk which might lead to failure of branches of the entire tree

Load on defect N/A ☐ Minor ☐ Moderate ☐ Significant ■ ____
Likelihood of failure Improbable ☐ Possible ☐ Probable ■ Imminent ☐ ____

— Trunk —

Dead/Missing bark ■ Abnormal bark texture/color ☐
Codominant stems ☐ Included bark ☐ Cracks ☐
Sapwood damage/decay ☐ Cankers/Galls/Burls ☐ Sap ooze ☐
Lightning damage ☐ Heartwood decay ■ Conks/Mushrooms ☐
Cavity/Nest hole 40 % circ. Depth 20" Poor taper ☐
Lean ____° Corrected? No
Response growth No
Main concern(s) Tree failure

Load on defect N/A ☐ Minor ☐ Moderate ☐ Significant ■
Likelihood of failure

— Roots and Root Collar —

Collar buried/Not visible ☐ Depth ____ Stem girdling ☐
Dead ■ Decay ■ Conks/Mushrooms ■
Ooze ☐ Cavity ☐ ____% circ.
Cracks ☐ Cut/Damaged roots ☐ Distance from trunk ____
Root plate lifting ☐ Soil weakness ☐

Response growth No
Main concern(s) ____

Load on defect N/A ☐ Minor ☐ Moderate ☐ Significant ☐
Likelihood of failure

Risk Categorization

Condition number	Tree part	Conditions of concern	Part size	Fall distance	Target number	Target protection	Likelihood: Failure: Improbable	Failure: Possible	Failure: Probable	Failure: Imminent	Impact: Very low	Impact: Low	Impact: Medium	Impact: High	Failure & Impact (from Matrix 1): Unlikely	Somewhat	Likely	Very likely	Consequences: Negligible	Minor	Significant	Severe	Risk rating of part (from Matrix 2)
1	Trunk	Large decay	40"	40'	1	No	○	○	●	○	○	○	○	●	○	○	●	○	○	○	○	●	High
							●	○	○	○	●	○	○	○	●	○	○	○	●	○	○	○	
							●	○	○	○	●	○	○	○	●	○	○	○	●	○	○	○	
2							●	○	○	○	●	○	○	○	●	○	○	○	●	○	○	○	
							○	○	○	○	○	○	○	○	○	○	○	○	○	○	○	○	
							○	○	○	○	○	○	○	○	○	○	○	○	○	○	○	○	
3							○	○	○	○	○	○	○	○	○	○	○	○	○	○	○	○	
							○	○	○	○	○	○	○	○	○	○	○	○	○	○	○	○	
							○	○	○	○	○	○	○	○	○	○	○	○	○	○	○	○	
4							○	○	○	○	○	○	○	○	○	○	○	○	○	○	○	○	
							○	○	○	○	○	○	○	○	○	○	○	○	○	○	○	○	
							○	○	○	○	○	○	○	○	○	○	○	○	○	○	○	○	

Matrix 1. Likelihood matrix.

Likelihood of Failure	Likelihood of Impacting Target: Very low	Low	Medium	High
Imminent	Unlikely	Somewhat likely	Likely	Very likely
Probable	Unlikely	Unlikely	Somewhat likely	Likely
Possible	Unlikely	Unlikely	Unlikely	Somewhat likely
Improbable	Unlikely	Unlikely	Unlikely	Unlikely

Matrix 2. Risk rating matrix.

Likelihood of Failure & Impact	Consequences of Failure: Negligible	Minor	Significant	Severe
Very likely	Low	Moderate	High	Extreme
Likely	Low	Moderate	High	High
Somewhat likely	Low	Low	Moderate	Moderate
Unlikely	Low	Low	Low	Low

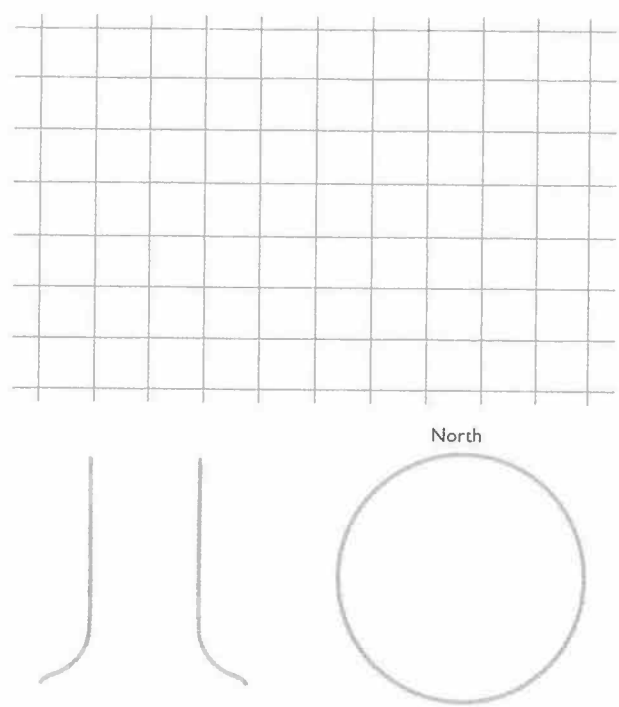

Notes, explanations, descriptions The tree is located in the front yard. On 9/25/24 a large 28" codominant lead dettached from the trunk an fell across the driveway into the neighbor's yard. The branch hit the neigl bor's roof and broke a few shingles and the edge of the roof. The client is concerned that the rest of the tree will fell

Mitigation options Due to the advanced condition of the decay no alternative solutions were considered. The tree is recommended for removal

Residual risk _____
Residual risk _____
Residual risk _____
Residual risk _____

Overall tree risk rating Low ☐ Moderate ☐ High ☐ Extreme ☐ **Work priority** 1 ☐ 2 ■ 3 ☐ 4 ☐

Overall residual risk Low ☐ Moderate ☐ High ☐ Extreme ☐ **Recommended inspection interval** 1 month after Inspection

Data ☐ Final ☐ Preliminary **Advanced assessment needed** ■ No ☐ Yes-Type/Reason _____

Inspection limitations ■ None ☐ Visibility ☐ Access ☐ Vines ☐ Root collar buried Describe